Anritsu

GTE-ERS
TECHNICAL LIBRARY
00958

# OPERATION AND SERVICE MANUAL

# ERROR RATE MEASURING EQUIPMENT

# ME448B

# ANRITSU ME 448B

# OPERATION AND SERVICE MANUAL

# ERROR RATE MEASURING EQUIPMENT

# ME448B

## CERTIFICATION

ANRITSU CORPORATION certifies that this instrument has been thoroughly tested and inspected, and found to meet published specifications prior to shipping.
Anritsu further certifies that its calibration measurements are based on the Japanese Electrotechnical Laboratory and Radio Research Laboratory standards.

## WARRANTY

All parts of this product are warranted by Anritsu Corporation of Japan against defects in material or workmanship for a period of one year from the date of delivery. In the event of a defect occurring during the warranty period, Anritsu Corporation will repair or replace this product within a reasonable period of time after notification, free-of-charge, provided that: it is returned to Anritsu; has not been misused; has not been damaged by an act of God; and that the user has followed the instructions in the operation manual.

Any unauthorized modification, repair, or attempt to repair, will render this warranty void.

This warranty is effective only for the original purchaser of this product and is not transferable if it is resold.

ALL OTHER EXPRESSED WARRANTIES ARE DISCLAIMED AND ALL IMPLIED WARRANTIES FOR THIS PRODUCT, INCLUDING THE WARRANTIES OF MERCHANTABILITY AND FITNESS FOR A PARTICULAR PURPOSE, ARE LIMITED IN DURATION TO A PERIOD OF ONE YEAR FROM THE DATE OF DELIVERY. IN NO EVENT SHALL ANRITSU CORPORATION BE LIABLE TO THE CUSTOMER FOR ANY DAMAGES, INCLUDING LOST PROFITS, OR OTHER INCIDENTAL OR CONSEQUENTIAL DAMAGES, ARISING OUT OF THE USE OR INABILITY TO USE THIS PRODUCT.

All requests for repair or replacement under this warranty must be made as soon as possible after the defect has been noticed and must be directed to Anritsu Corporation or its representative in your area.

Copyright (c) 1983 by Anritsu Electric Co., Ltd. Printed in Japan.
All rights reserved. No part of this manual may be reproduced in any form without written permission of Anritsu Electric Co., Ltd.

Copyright (c) 1985 by ANRITSU CORP. Printed in Japan.
All rights reserved. No part of this manual may be reproduced in any form without written permission of ANRITSU CORP.

# NOTICE

Anritsu changed its name from Anritsu Electric Co., Ltd., to ANRITSU CORP.

The new name is effective from October 1st 1985. Please change the old name to the new name in this manual.

Digitized by the Internet Archive
in 2025

https://archive.org/details/manualsplus_06321

N O T E

(1) The instrument is operable on a nominal voltage from 100 to 130 Vac or from 200 to 250 Vac by changing the connections of the power transformer taps.

The voltage and current rating are indicated on the rear panel when the instrument is shipped from the factory.

In the case of other voltage operation, change the connections of the power supply transformer, and the plate of voltage and current designations on the rear panel should be changed to suitable one.

Order the plates to Anritsu Electric Co., Ltd. if necessory.

(2) In this manual, a power supply voltage and current rating are represented by [**] Vac, [***] A and [****] A

(3) The relation between power supply voltage and current rating is listed below.

| ** Vac | *** A | **** A |
|---|---|---|
| 100 to 130 V | 2 A | 1 A |
| 200 to 250 V | 1 A | 1 A |

(4) Sending unit clock signal bit rates in this manual are expressed as X1, X2, X3 and X4.
These bit rates are indicated on the front panel when the instrument is shipped from the factory.
(X3 and X4 are optional)

(5) Receiving unit bipolar signal frequencies in this manual are expressed as F1, F2, F3 and F4.
These frequencies are indicated on the front panel when the instrument is shipped from the factory.
(only one frequency is standard)

TABLE OF CONTENTS


| | | Page |
|---|---|---|
| SECTION 1 | GENERAL ..... | 1-1 |
| SECTION 2 | COMPOSITION AND SPECIFICATIONS | |
| 2.1 | COMPOSITION ..... | 2-1 |
| 2.1.1 | Standard Composition ..... | 2-1 |
| 2.1.2 | Options ..... | 2-2 |
| 2.2 | SPECIFICATIONS ..... | 2-4 |
| SECTION 3 | PRINCIPLES OF OPERATION | |
| 3.1 | PSEUDO RANDOM PATTERN ..... | 3-1 |
| 3.2 | PCM LINE CODE ..... | 3-3 |
| 3.3 | ERROR DETECTION ..... | 3-6 |
| 3.3.1 | Binary Error Detection ..... | 3-6 |
| 3.3.2 | Code Violation Error Detection (Option 40) | 3-8 |
| 3.4 | PRINCIPLE OF OPERATION ..... | 3-10 |
| 3.4.1 | Sending Unit ..... | 3-10 |
| 3.4.2 | Receiving Unit ..... | 3-12 |
| SECTION 4 | OPERATING INSTRUCTIONS | |
| 4.1 | SAFETY MEASURES ..... | 4-1 |
| 4.1.1 | Fuse Replacement ..... | 4-1 |
| 4.1.2 | Precautions When Changing From a Low Temperature to a High Temperature ..... | 4-2 |
| 4.2 | INSTALLATION ENVIRONMENT ..... | 4-2 |
| 4.3 | POWER ..... | 4-2 |

Page

4.3.1 ac Power Operation ..... 4-2

4.3.2 dc Power Operation ..... 4-3

4.4 PANEL DESCRIPTION ..... 4-4

4.5 MEASUREMENT PREPARATIONS ..... 4-15

4.5.1 Unipolar Signal ..... 4-15

4.5.2 Bipolar Signal ..... 4-17

4.6 MEASUREMENT ..... 4-18

4.6.1 Loop-back Measurements on a Digital Multiplex Equipment (MPX, DEMPX) ..... 4-18

4.6.2 Binary Error Rate Measurement on a Digital Radio System ..... 4-20

4.6.3 Binary Error Rate Measurement on a Digital Line System ..... 4-27

4.6.4 Code Violation Error Measurement while Digital Line System is in Service ..... 4-33

4.6.5 ME448B and Peripheral Device Connections ..... 4-35

SECTION 5 PERFORMANCE CHECK

5.1 TEST EQUIPMENT REQUIRED FOR PERFORMANCE CHECK ..... 5-1

5.2 PERFORMANCE CHECKS ..... 5-2

5.2.1 Sending Unit Internal Oscillator Frequency Accuracy ..... 5-2

5.2.2 Operating Bit Rate Range Check ..... 5-4

5.2.3 Sending Unit Output Waveform Check ..... 5-5

5.2.4 Receiving Unit Bipolar Signal Input Level Range Check ..... 5-10

SECTION 6 REPAIR


| | | Page |
|---|---|---|
| 6.1 | TROUBLESHOOTING ..... | 6-1 |
| 6.1.1 | Power Supply Circuit Repair ..... | 6-4 |
| 6.1.2 | Sending Unit Clock Generator and Pattern Generator (1/63 or Pseudo-random Pattern Generator) Troubleshooting ..... | 6-6 |
| 6.1.3 | Sending Unit Unipolar Output Circuit Troubleshooting ..... | 6-7 |
| 6.1.4 | Sending Unit Unbalanced Bipolar Output (Standard) Circuit Repair ..... | 6-10 |
| 6.1.5 | Sending Unit Bipolar Output (Option) Circuit Repair ..... | 6-11 |
| 6.1.6 | Binary Error Rate Measurement Unsatisfactory with Unipolar Signal ..... | 6-13 |
| 6.1.7 | Binary Error Rate Measurement Unsatisfactory with Bipolar Signal ..... | 6-16 |
| 6.1.8 | Code Violation Error Rate Measurement cannot be Performed with Bipolar Signal .. | 6-17 |
| 6.1.9 | Receiving Unit DATA OUTPUT for Printer Abnormal ..... | 6-18 |
| 6.1.10 | Receiving Unit RECORDER OUTPUT Abnormal ..... | 6-20 |

CIRCUIT DIAGRAM

REPLACEABLE PARTS

Introduction

Ordering Information

COMPONENT LIST

ASSEMBLE

APPENDIX Mounting the Option 11/12 ..... A-1

INSTRUCTION MANUAL GP-IB INTERFACE
(Option 44 Receiving unit only)


05

LIST OF FIGURES


| Figure No. | | Page |
|---|---|---|
| 3-1 | Spectrum Distribution of Pseudo Random Pattern ..... | 3-1 |
| 3-2 | PN15 Generator and Exclusive-OR Truth Table ..... | 3-3 |
| 3-3 | Line Code Example ..... | 3-5 |
| 3-4 | Bit Error Detection Method (for PN15) ..... | 3-7 |
| 3-5 | Code Error Examples ..... | 3-9 |
| 3-6 | ME448B Sending Unit Block Diagram ..... | 3-12 |
| 3-7 | ME448B Receiving Unit Block Diagram ..... | 3-15 |
| 4-1 | AC Power Supply Circuit ..... | 4-1 |
| 4-2 | MB448B Sending Unit (with OPTIONS 12, 22) External Views ..... | 4-12 |
| 4-3 | ME448B Receiving Unit (with OPTIONS 17, 22, 40) External Views ..... | 4-12 |
| 4-4 | Digital Multiplex Equipment and ME448B Connections ..... | 4-18 |
| 4-5 | 4PSK Digital Radio System and ME448B Connections ..... | 4-23 |
| 4-6 | 8PSK Digital Radio System and ME448B Connections ..... | 4-23 |
| 4-7 | 16QAM Digital Radio System and ME448B Connections ..... | 4-25 |
| 4-8 | Digital Line System and ME448B Connections . | 4-31 |
| 4-9 | Unbalanced Signal System and ME448B Connections ..... | 4-34 |
| 4-10 | Balanced Signal System and ME448B Connections ..... | 4-34 |
| 4-11 | Pen Recorder Output Example (COUNT TIME $10^9$ bits) ..... | 4-39 |
| 4-12 | ME448B Receiving Unit and Peripheral Device Connections ..... | 4-39 |

| Figure No. | | Page |
|---|---|---|
| 5-1 | Sending Unit Internal Oscillator Frequency Accuracy Check ..... | 5-2 |
| 5-2 | Operating Bit Rate Range Check ..... | 5-4 |
| 5-3 | Unipolar Output (ECL Level) Check ..... | 5-5 |
| 5-4 | Unipolar (ECL) Output Circuit and Input Circuit ..... | 5-6 |
| 5-5 | Unipolar Output (0/+2.4 V, 0/+3 V) and Bipolar (UNBAL) Output Check ..... | 5-7 |
| 5-6 | Balanced Bipolar Signal Output Waveform Check ..... | 5-8 |
| 5-7 | Mask of the Pulse at 1,544 Kbit/s Interface ..... | 5-9 |
| 5-8 | Bipolar Signal Input Level Range Check ..... | 5-10 |
| 6-1 | Sending Unit Troubleshooting ..... | 6-2 |
| 6-2 | Receiving Unit Troubleshooting ..... | 6-3 |
| 6-3 | Sending Unit Power Supply Circuit Repair ... | 6-4 |
| 6-4 | Receiving Unit Power Supply Repair ..... | 6-5 |
| 6-5 | Sending Unit Clock Generator and Pattern Generator (1/63 or Pseudo Random Pattern Generator) Troubleshooting ..... | 6-6 |
| 6-6 | Unipolar Output Circuit (ECL output) Troubleshooting ..... | 6-7 |
| 6-7 | 0/+2.4 V Output (Option 31) Troubleshooting | 6-8 |
| 6-8 | 0/+3 V Output (Option 32) Circuit Troubleshooting ..... | 6-9 |
| 6-9 | Bipolar Unbalanced Output Circuit (Standard) Troubleshooting ..... | 6-10 |
| 6-10 | Bipolar Output Circuit (Unbalanced Output, Option 21) Troubleshooting ..... | 6-11 |
| 6-11 | Bipolar Output Circuit (Balanced Output, Option 22) Troubleshooting ..... | 6-12 |

Figure No. Page

6-12 Binary Error Rate Measurement Unsatisfactory with Receiving Unit Unipolar Signal (Error Output, Clock Output Abnormal) ..... 6-13

6-13 Binary Error Rate Measurement Unsatisfactory with Unipolar Signal (Error Output, Clock Output Normal) ..... 6-14

6-14 Binary Error Rate Measurement Unsatisfactory with Bipolar Signal ..... 6-16

6-15 Code Violation Error Rate Measurement Unsatisfactory with Bipolar Signal ..... 6-17

6-16 DATA OUTPUT Circuit Troubleshooting ..... 6-18

6-17 RECORDER OUTPUT Circuit Troubleshooting ..... 6-20

LIST OF TABLES


| Table No. | | Page |
|---|---|---|
| 2-1 | Standard Composition ..... | 2-1 |
| 2-2 | Specifications ..... | 2-4 |
| 4-1 | ME448B DC Input Connector (15) (39) Pin Numbers and Input Voltage ..... | 4-4 |
| 4-2 | ME448B Sending Unit ..... | 4-5 |
| 4-3 | ME448B Receiving Unit ..... | 4-8 |
| 4-4A | PCM 24CH Hierarchy (North America) ..... | 4-27 |
| 4-4B | PCM 24CH Hierarchy (Japan) ..... | 4-27 |
| 4-5 | Data Output Signals ..... | 4-35 |
| 5-1 | Equipment Required for Performance Check ... | 5-1 |
| 5-2 | Unbalanced Signal Input Level Range and ATT1 and AMP1 Values ..... | 5-11 |
| 5-3 | Balanced Signal Input Level Range and ATT2 and AMP2 Values ..... | 5-11 |
| 6-1 | Voltage of J1 on Z9 ..... | 6-15 |
| 6-2 | Data Output ..... | 6-19 |

# SECTION 1
# GENERAL

The ME448B Error Rate Measuring Equipment measures binary error rate and code violation error rate (option) in 1 kbit/s to 50 Mbit/s digital system. The ME448B is suitable for testing and maintenance of 1st to 3rd order digital line systems, digital radio systems, and digital optical fiber systems and for adjustment and testing of digital multiplex equipment. The ME448B consists of a sending unit and a receiving unit.
End-to-end and loop-back tests can be made with a single test set alone.

Since the sending unit transmits a 32,767 bits ($2^{15}$-1) or a 838,8607 bits ($2^{23}$-1) pseudo random pattern, measurements are made in a state close to the actual PCM line.

The receiving unit receives the signals from the system under measurement, detects and counts the error pulses, and digitally displays the error rate. The error rate of unipolar signals and AMI (Alternate Mark Inversion), B3ZS (Bipolar with 3-zero Substitution), B6ZS (Bipolar with 6-zero Substitution) coded bipolar signals can be measured.

The results of long-term continuous measurements by the ME448B can be printed on a MH047A Digital Printer. ME448B equipped with option 45 operates on station battery in conjunction with DC-DC Converter MZ102A.

SECTION 2

COMPOSITION AND SPECIFICATIONS

## 2.1 COMPOSITION

### 2.1.1 Standard Composition

Table 2-1 shows the standard composition of the ME448B Error Rate Measuring Equipment.

Table 2-1 Standard Composition

| Item | Description | Quantity | Remarks |
|---|---|---|---|
| Measuring Equipment | ME448B Error Rate Measuring Equipment Sending Unit | 1 | |
| | ME448B Error Rate Measuring Equipment Receiving Unit | 1 | |
| Accessories | Coaxial Cord for Measurement | 7 | 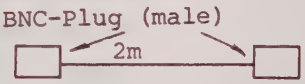  |
| | Fuse | 10 | Four ac power fuses and six internal dc fuses. |
| | Operation and Service Manual | 1 | |
| | ac power supply cord | 2 | |

## Options

OPT11 Additional one frequency to internal clock

OPT12 Additional two frequencies to internal clock

OPT21 Additional unbalanced bipolar output

OPT22 Additional balanced bipolar output and input

OPT31 Modified output and input level from ECL to 0/+2.4V (75Ω)
Operating range : 1 kbit/s to 10 Mbit/s

OPT32 Modified output and input level from ECL to 0/+3V (75Ω)
Operating range : 1 kbit/s to 50 Mbit/s

OPT33 Modified output level and waveform from ECL, NRZ to 0/+3V (75Ω), RZ
Operating range : 1 kbit/s to 50 Mbit/s

OPT16 Additional one frequency to receiving bipolar clock recovery

OPT17 Additional two frequencies to receiving bipolar clock recovery

OPT18 Additional three frequencies to receiving bipolar clock recovery

OPT40 Detecting error pulses : Binary errors and code violation errors
(by switch selection)

OPT41 Accessories supplied are replaced from BNC -—- BNC to BNC -—- SP-3CP.

OPT42 Additional transducer for unbalanced equipment.

OPT43 Additional transducer for balanced equipment.

OPT44 GP-1B (IEEE 488/IEC 625-1, 24-pole connector) interface (Receiving unit only)

OPT45 DC power operation using DC-DC Converter MZ102A

**Note 1 :** One of the OPT11 and OPT12 is possible
One of the OPT21 and OPT22 is possible
One of the OPT31, OPT32 and OPT33 is possible
One of the OPT16, OPT17 and OPT18 is possible

**Note 2 :** OPT40 is the option for measuring the code violation errors.
The specification of input level is as follows.
Unbalanced input: 40 to 140 mVo-p, 0.4 to 1.4 Vo-p or 0.8 to 2.8 Vo-p by switch selection.
Balanced input: 0.12 to 0.36 Vo-p, 1.2 to 3.6 Vo-p by switch selection.
Other specifications are the same to the standard.

## Optional apparatus

- DIGITAL PRINTER MH047A

  Measured results are recorded with the time (days, hours, minutes, and seconds): permitting continuous measurement for long hours from 00 day, 00 hour, 00 minute, 00 second to 99 days, 23 hours, 59 minutes, 59 seconds.

- MZ102A DC-DC CONVERTER

  ME448B equipped with option 45 operates on station battery in conjunction with DC-DC Converter MZ102A.

## 2.2 SPECIFICATIONS

### Table 2-2 Specifications (Sending unit)

| | | | |
|---|---|---|---|
| Internal clock | frequency | Any two frequencies from 100kHz to 50MHz<br>( Specify the frequencies in placing your order) | |
| | Accuracy | Within ± 10 ppm | |
| | Additional one frequency<br>( OPT 11 ) | Additional any one frequency from 100kHz to 50MHz<br>(Specify the frequency in placing your order) | One of the OPT 11 and OPT 12 is possible |
| | Additional two frequencies<br>( OPT 12 ) | Additional any two frequencies from 100kHz to 50MHz<br>(Specify the frequencies in placing your order) | |
| External clock | Operating frequency | 1 kHz to 50 MHz | |
| | Input level | 0.8 to 1.5 Vp-p | |
| | Impedance | 75Ω nominal to ground | |
| | Connector | BNC female | |
| Output pattern | Pseudo-random pattern | 15 or 23 stages by switch selection<br>(Maximum length $2^{15}$ -1 or $2^{23}$ -1 bits) | |
| | Isolated pattern | 1/63 (1 bit mark every 63 bits clock) | |
| Bilolar output pattern | Code | AMI, B3ZS, B6ZS by switch selection | |
| | Level | 2.0 V0-p, 1.0 V0-p by switch selection | |
| | Load | 75Ω nominal to ground | |
| | Operation range | 100 kbit/s to 50 Mbit/s | |
| | Number of output | 2 | |
| | Attenuation | 6 dB ON, OFF by switch selection | |
| | Connector | BNC female | |
| | Additional unbalanced bipolar output(OPT 21) | | One of the OPT 21 and OPT 22 is possible |
| | Number of output | 2 | |
| | Other specifications | Same to the standard | |
| | Additional balanced bipolar output(OPT 22)<br>(common option to receiving unit) | | |
| | Number of output | 2 | |
| | Operating range | 1 Mbit/s to 6.5 Mbit/s | |
| | Level | 3 V0-p | |
| | Load | 100Ω to 110Ω ( balanced ) | |
| | Under shoot | ON, OFF by switch selection(1544 kbit/s only) | |
| | Connector | Fit with M-214S(banana type plug) | |
| Unipolar output | Operating range | 1 kbit/s to 50 Mbit/s | |
| | Pattern | | |
| | Waveform | NRZ | |
| | Level | ECL(High level:-1.1V,Low level:-1.52V) | |
| | Load | 100Ω to ground and 300Ω to -5.2V (See Fig. 5-4) | |
| | Number of output | 4 | |
| | Connector | BNC female | |
| | Clock | | |
| | Level | ECL(High level:-1.1V, Low level:-1.52V) | |
| | Load | 100Ω to ground and 300Ω to -5.2V (see Fig. 5-4) | |
| | Number of output | 2 | |
| | Connector | BNC female | |
| | Modified output (OPT 31)<br>(common option to receiving unit) | | One of the OPT 31, OPT 32 and OPT 33 is possible |
| | Modified output | 0/+2.4V | |
| | Load | 75Ω nominal to ground | |
| | Operating range | 1 kbit/s to 10 Mbit/s | |
| | Other specifications | Same to the standard | |

## Table 2-2 (Sending unit) (cont)

| | | | |
|---|---|---|---|
| Unipolar output | Modified output (OPT 32) (common option to receiving unit) | | One of the OPT 31, OPT 32 and OPT 33 is possible |
| | Modified output | 0/ +3V | |
| | Load | 75Ω nominal to ground | |
| | Other specifications | Same to the standard | |
| | Modified output (OPT 33) | | |
| | Modified output | 0/ +3V | |
| | Load | 75Ω nominal to ground | |
| | Modified waveform | RZ | |
| | Other specifications | Same to the standard | |
| 1/63 Pattern Sync output | Level | 0.5 Vp-p to 1.0 Vp-p | |
| | Load | 50Ω nominal to ground | |
| | Connector | BNC female | |
| Power | | **V ac, 50/60Hz, ≦ 75VA | |
| Dimensions and weight | | Approximately 145H, 282W, 300D mm, ≦ 7.5 kg | |

## Table 2-2 (Receiving unit)

| | | | |
|---|---|---|---|
| Bipolar input | Timing recovery frequency | Any one frequency of the following (Specify the frequency in placing your order) 1544 kHz 44736 kHz 3152 kHz 6312 kHz 32064 kHz | |
| | Code | AMI , B3ZS, B6ZS by switch selection | |
| | Level | 0.4 to 1.4 V0-p, 0.8 to 2.8 V0-p by switch selection | |
| | Impedance | 75Ω nominal to ground | |
| | Connector | BNC female | |
| | Additional one frequency (OPT 16) | Additional any one frequency of the following 1544 kHz 44736 kHz 3152 kHz 6312 kHz 32064 kHz | One of the OPT 16, OPT 17 and OPT 18 is possible |
| | Additional two frequencies (OPT 17) | Additional any two frequencies of the following 1544 kHz 44736 kHz 3152 kHz 6312 kHz 32064 kHz | |
| | Additional three frequencies (OPT 18) | Additional any three frequencies of the following 1544 kHz 44736 kHz 3152 kHz 6312 kHz 32064 kHz | |
| | Additional balanced bipolar input (common option to sending unit) (OPT 22) | | |
| | Bit rate | 1544 kbit/s, 3152 kbit/s, 6312 kbit/s | |
| | Code | Same to the standard | |
| | Level | 1.2 to 3.6 V0-p | |
| | Impedance | 100 or 110Ω ( balanced ) fixed internaly | |
| | Connector | Fit with M-214S | |
| Unipolar input | Operating range | 1 kbit/s to 50 Mbit/s | |
| | Pattern | | |
| | Waveform | NRZ | |
| | Level | ECL( Same to the sending unit output level ) | |
| | Termination | 100Ω to ground and 300Ω to -5.2V(See Fig. 5-4) | |
| | Connector | BNC female | |
| | Clock | | |
| | Level | ECL( Same to the sending unit output level ) | |
| | Termination | 100Ω to ground and 300Ω to -5.2V(See Fig. 5-4) | |
| | Connector | BNC female | |

## Table 2-2 (Receiving unit) (cont)

| | | | |
|---|---|---|---|
| Unipolar input | Modified input (OPT 31) (common option to sending unit) | | One of the OPT 31 and OPT 32 is possible |
| | Modified pattern and clock input level | 0/ +2V to +3V | |
| | Impedance | 75Ω nominal to ground | |
| | Operating range | 1 kbit/s to 10 Mbit/s | |
| | Other specifications | Same to the standard | |
| | Modified input (OPT 32) (common option to sending unit) | | |
| | Modified pattern and clock input level | 0/ +3V | |
| | Impedance | 75Ω nominal to ground | |
| | Other specifications | Same to the standard | |
| Measuring pattern | Pseudo-random pattern | Maximum length $2^{15}$ -1 or $2^{23}$ -1 bits by switch selection | |
| Detecting error pulses | Binary errors | Bit-by-bit | |
| | Binary errors and code violation errors (OPT 40) | By switch selection ( See Note 2 ) | |
| Error rate measurement | Display | $1 \times 10^{-9}$ to $9.9 \times 10^{-3}$ ( Two digit LED and exponent ) | |
| | Counting time | $10^7$,$10^8$ or $10^9$ bits by switch selection | |
| | Display hold time | 0 or 1 sec by switch selection | |
| Error count measurement | Display | 0 to $9.9 \times 10^4$ ( Two digit LED and exponent ) | |
| Clock output | Level | 1 to 2V (positive) | |
| | Load | 75Ω nominal to ground | |
| | Connector | BNC ferale | |
| Error pulses output | Level | 1 to 2V (positive) | |
| | Load | 75Ω nominal to ground | |
| | Waveform | PZ | |
| | Connector | BNC female | |
| Recorder output | | DC output of the exponent only of the measured result in error rate measurement: Variation in dc 0.5V steps from $10^{-9}$ to $10^{-3}$ | |
| Printer output | | Measured result in error rate measurement two digit LED and exponent ( However, printing is made when error pulses are counted) Measured result in error count measurement two digit LED and exponent ( Printing is made when pushed start or stop button ) | |
| Buzzer | | Sounding is made when detected error pulses ( ON, OFF by switch selection ) | |
| Power | | **V ac, 50/60Hz, ~ 45VA | |
| Dimensions and weight | | Approximately 145H, 282W, 300D mm, ≈ 6.5 kg | |

SECTION 3

PRINCIPLES OF OPERATION

## 3.1 PSEUDO RANDOM PATTERN

The quality of PCM transmission systems is generally evaluated by the bit error rate. CCITT Rec. O.151 recommends that a pseudo random pattern should be used as the signal source for bit error rate measuring equipment. The pseudo random pattern is adopted because:

1) The signal closely resembles that of the actual PCM line since the mark density is 0.5 and the period is long.

2) It has the constant, wideband spectrum spacing shown in Fig. 3-1.

3) If the number of shift registers used to generate the pseudo random pattern is N, the period is $2^N-1$ bits. Because the signal is periodic, even though it resembles a random pattern signal, it is easy to synchronize reference pattern and receiving signal and accurate, reproducible measurements are possible. (N: Positive integer, $\geq 2$)

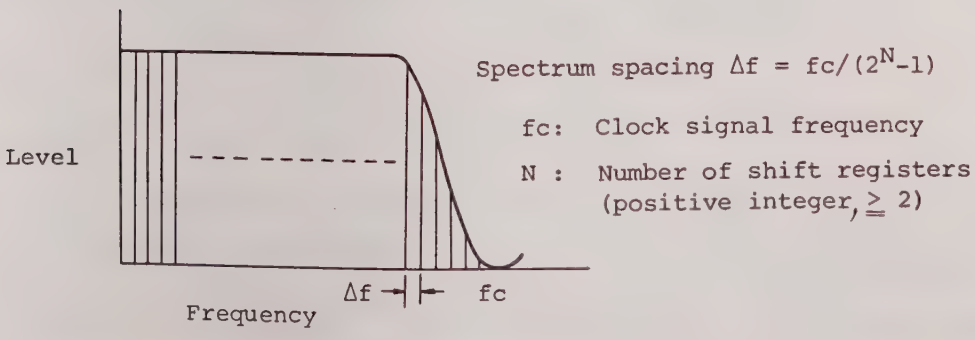


Fig. 3-1 Spectrum Distribution of Pseudo Random Pattern

The ME448B sending unit can select and send two kinds of pseudo random noise pattern (PN), PN15 and PN23.

Note: PN15 ... $2^{15}-1$ bits period pseudo random pattern generated by 15 shift registers.

PN23 ... $2^{23}-1$ bits period pseudo random pattern generated by 23 shift registers.

The following generator polynominals are used to generate this pattern:

| | Number of registers | Generator polynominal |
|---|---|---|
| PN15 | 15 | $X^{15} + X^{14} + 1 = 0$ |
| PN23 | 23 | $X^{23} + X^{18} + 1 = 0$ |

Note: $X^{15}$ is signal delayed by 15 bits relative to the SR1 input.

Fig. 3-2 shows the principle of generating PN15 Pattern. The circuit consists of 15 shift registers and an Exclusive-OR gate. The output of the 14th and 15th shift registers are fed into the Exclusive-OR gate and the output of the gate feeds back into the 1st shift register. The output is the inverted from of this PN signal. The maximum number of consecutive "0" (LOW level) is 15 and the maximum number of consecutive "1" (HIGH level) is 14.

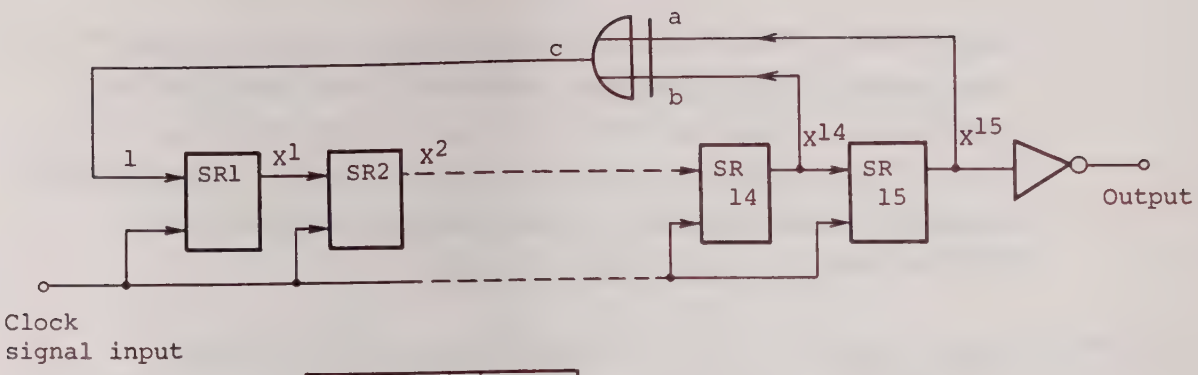


| a | b | c |
|---|---|---|
| 1 | 0 | 1 |
| 0 | 1 | 1 |
| 0 | 0 | 0 |
| 1 | 1 | 0 |

a, b: Exclusive-OR input
c : Exclusive-OR output
SR : Shift register

Fig. 3-2 PN15 Generator and Exclusive-OR Truth Table

## 3.2 PCM LINE CODE

CCITT G703 recommends use of the AMI CODE, B6ZS CODE and B3ZS CODE as the PCM 24 channel system 1st to 3rd order line code. B6ZS and B3ZS codes are zero substitution code. These codes are used to facilitate clock recovery. The detail of these codes is described below. AMI, B6ZS or B3ZS is selected by switch as a line code. A unipolar NRZ signal or RZ signal (Option) can also be sent independently of the bipolar signal. Fig. 3-3 is an example of unipolar and bipolar codes.

NOTE: NRZ ..... No Return to Zero
RZ ..... Return to Zero

### 3.2.1 AMI (Alternate mark inversion) Code

AMI code is a bipolar RZ pulse format. A logical "1" level is represented by a pulse, whose width is 50 per cent duty cycle. A Logical "0" is represented by absence of a pulse. Successive logical "1" pulses must alternate positive and negative polarity but equal in

amplitude. There are no transitions for a logical "0". This makes clock recovery difficult for straight AMI. AMI code is used as the 1st order (1.544 Mbit/s, 3.152 Mbit/s) line code in North America. It is also used as the 1st to 3rd order (1.544 Mbit/s, 6.312 Mbit/s, 32.064 Mbit/s) line code in Japan.

### 3.2.2 B6ZS (Bipolar with six-zero substitution) Code

The B6ZS code is a modified bipolar pulse format. Logical "1" bits are 50 per cent duty cycle and are generally alternately positive and negative with respect to the logical "0" level. Exceptions are cases where six logical "zeros" appear together in the bitstream. In the B6ZS format, each block of six consecutive zeros is removed and replaced by OVBOVB where B represents a pulse conforming with the bipolar rule and V represents a pulse violating the bipolar rule. B6ZS code is used as the 2nd order (6.312 Mbit/s) line code in North America.

### 3.2.3 B3ZS (Bipolar with three-zero substitution) Code

The B3ZS code is a modified bipolar pulse format. Logical "1" bits are 50 per cent duty cycle and are generally alternately positive and negative with respect to the logical "0" level. Exceptions are cases where three logical "0s" appear together in the bitstream. In the B3ZS format, each block of three consecutive zeros is removed and replaced by B0V or 00V where B represents a pulse conforming with the bipolar rule and V represents a pulse violating the bipolar rule. The choice of B0V or 00V is made so that the number of B pulses between consecutive V pulses is odd. B3ZS code is used as the 3rd order (44.736 Mbit/s) line code in North America.

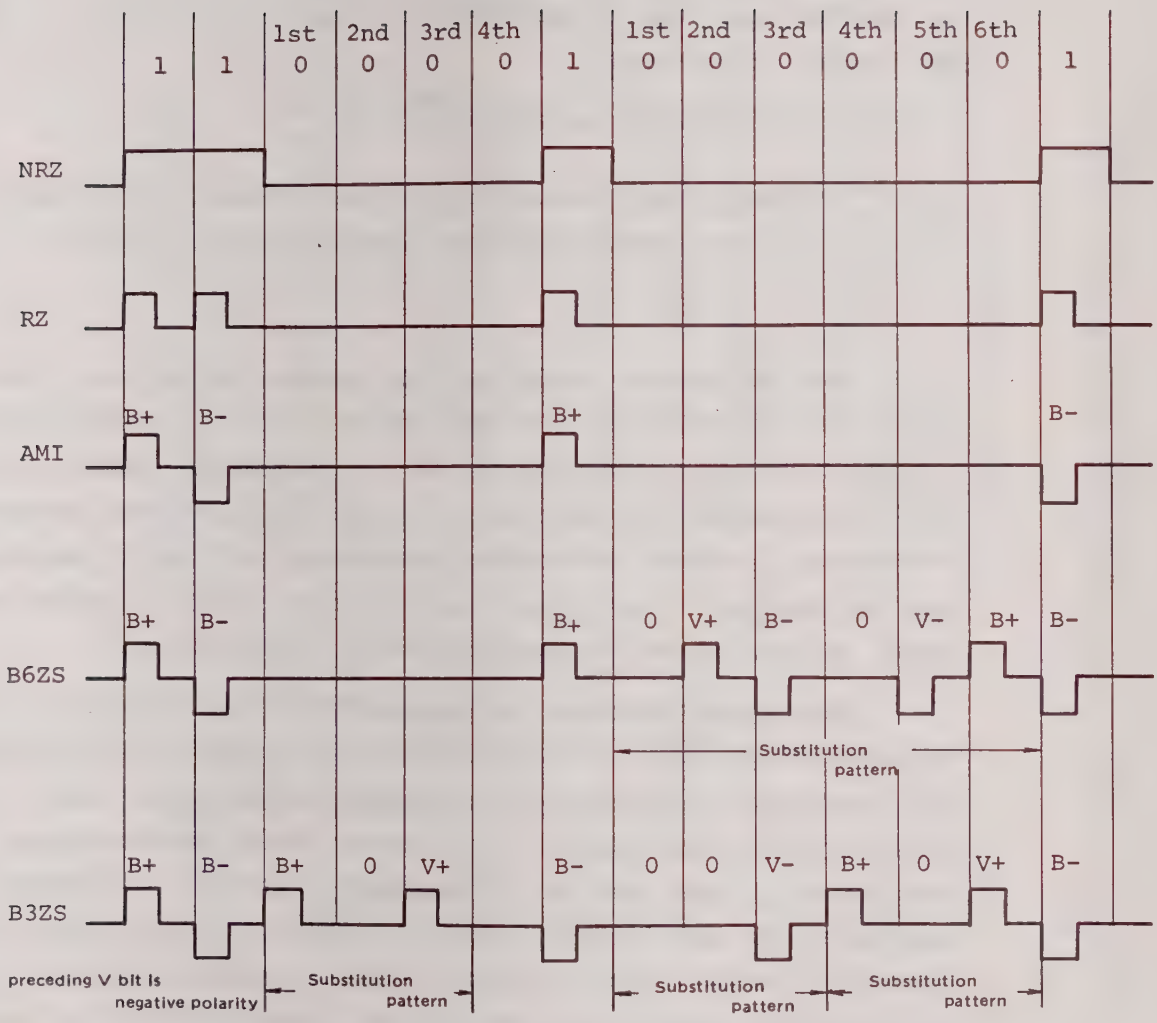


Fig. 3-3 Line Code Example

## 3.3 ERROR DETECTION

### 3.3.1 Binary Error Detection

There are various methods used to detect binary errors. The ME448B uses the measurement method shown in Fig. 3.4. This method features:

(1) Bit-by-bit detection.

(2) Short synchronization time virtually unrelated to the period of the pseudo random pattern.

The following explains this detection method. When there is no input to the receiving unit, S1 switch shown in Fig. 3-4 is connected to A. If a pseudo random pattern is then applied to the input, it is fed into the receiving reference pattern generator consisting of shift registers and an Exclusive-OR gate, and the same pseudo random pattern as that from the sending unit is generated.

The input pattern is compared to the receiving unit reference pattern and any errors are detected and counted. If there are no errors in 30 consecutive clock bits, the sending and receiving unit is considered synchronized to the input signal and S1 is connected to B. Measurement begins from this point. When 1,024 bit errors occur within 10,240 bits (clock signal) after synchronization, the sending and receiving pattern are considered out of synchronization, S1 is connected to A, and the sending and receiving pattern are resynchronized.

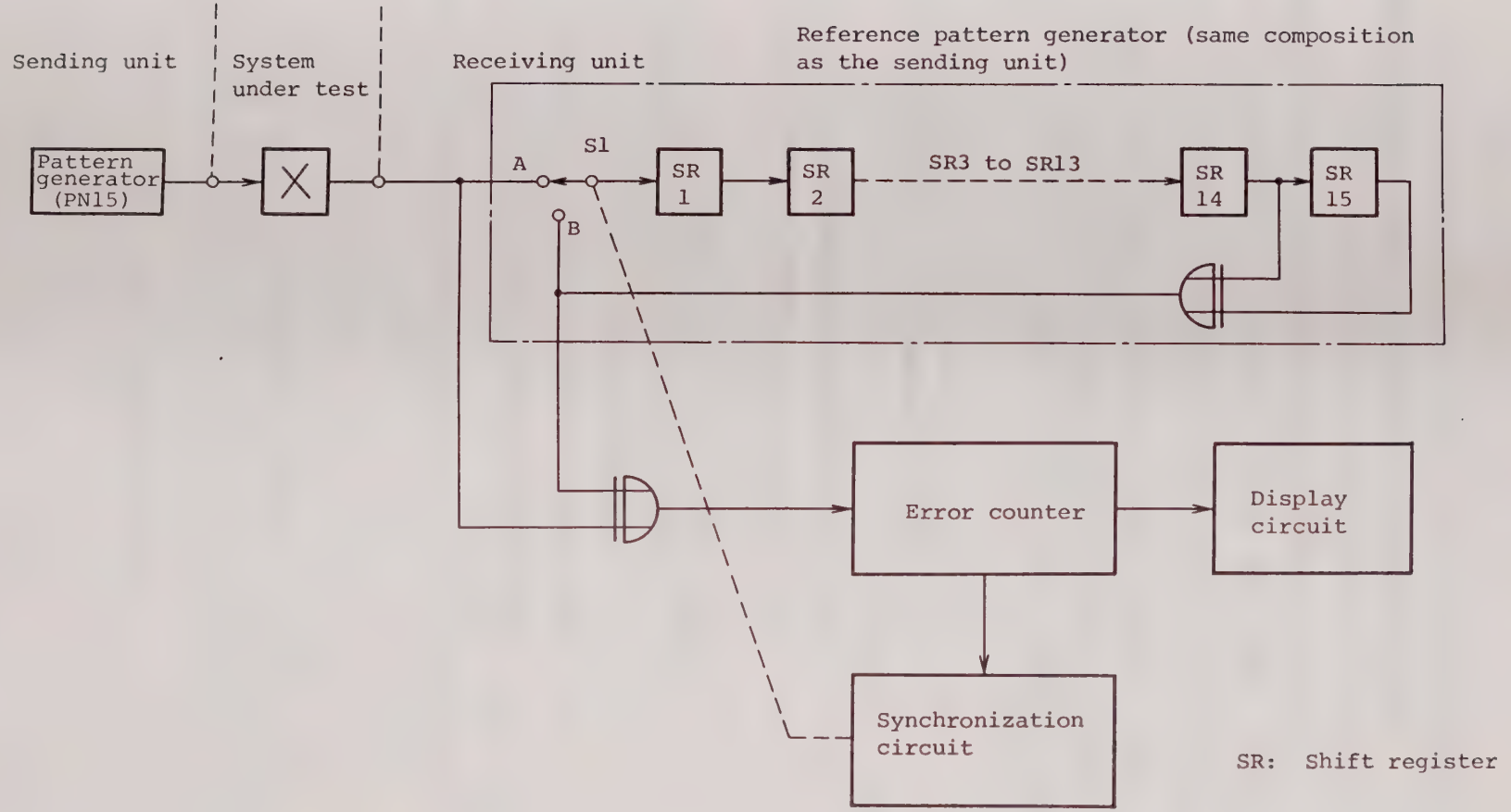


Fig. 3-4 Binary Error Detection Method (for PN15)

### 3.3.2 Code Violation Error Detection (Option 40)

As explained in Section 3.2, AMI, B6ZS or B3ZS code can be selected with the ME448B.

A code violation error is a violation of coding rule. When AMI code is selected, positive and negative pulses entering alternately is considered normal. When two or more consecutive pulses of the same polarity enter, ME448B detects an error. The B6ZS or B3ZS conversion rules were given in Section 3.2.2 or 3.2.3. The ME448B treats the following two conditions as errors:

(a) The number of consecutive logical zeros exceeds the number given in Section 3.2.2 or 3.2.3.

B3ZS code violation errors .....
When occuring three or more consecutive logical zeros.

B6ZS code violation errors .....
When occuring six or more consecutive logical zeros.

(b) The V bit violatates the V (violation) bit conversion rules given in Section 3.2.2 or 3.2.3.

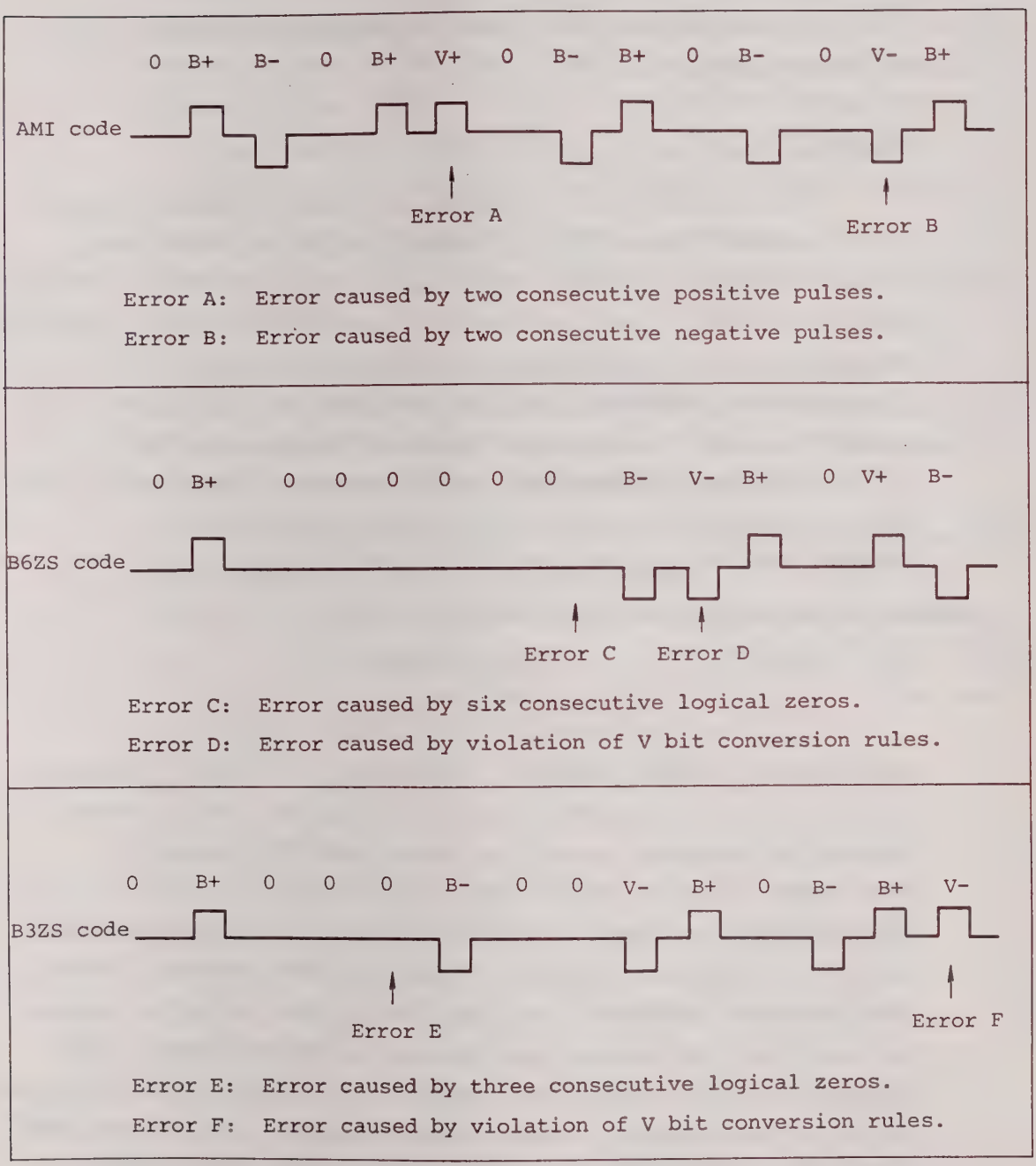


Fig. 3-5 Code Error Example

## 3.4 PRINCIPLE OF OPERATION

Fig. 3-6 and Fig. 3-7 are the sending and receiving unit block diagrams.

### 3.4.1 Sending Unit

The sending unit consists of a clock signal generator, pattern generator, unipolar output circuit, and bipolar output circuit. The clock signal generator of the ME448A standard type contains two frequency crystal oscillators. A maximum of 4 frequencies is available as an option. The pattern generator can be switched to a 1/63 isolated pattern, a $2^{15}$-1 bits period pseudo random pattern, or a $2^{23}$-1 bits period pseudo random pattern. The pseudo random patterns are used in error rate measurement. Pseudo random pattern period is as follows.

| Number of Registers (N) | Period ($2^N$-1) |
|---|---|
| 15 | 32,767 bits |
| 23 | 8,388,607 bits |

The pseudo random pattern is divided to a $1/2^{10}$ pattern ("1" is 1 bit in clock signal 1,024 bits) and an error pulse is inserted using the ERROR ADDITION switch. The error rate at this time is $1/1024 \fallingdotseq 9.7 \times 10^{-4}$. Error pulses are not inserted for the 1/63 isolated pattern. In the case of PN15, the four NRZ patterns from the pattern generator are applied to the unipolar output circuit and are sequentially delayed approximately 1/4 period ($\fallingdotseq$ 8192 bits) from output 1 to output 4 to minimize pattern correlation between the patterns. Since one NRZ pattern is converted to a bipolar signal (AMI, B6ZS or B3ZS code), it is encoded and becomes two NRZ patterns ((+) pulse route and (-) pulse route). These signals and the two NRZ pattern signals delayed from these signals by 6 bits and the clock signal are applied to the bipolar output circuit. The bipolar output circuit has two

outputs. Output 2 is delayed by 6 bits compared to output 1. Output 1 and 2 circuits consist of an NRZ/RZ converter and a Unipolar/Bipolar converter and output a bipolar signal with a duty factor of approximately 50%.

The desired output level is selected with the 2 V, 1 V switch and 6 dB attenuator. The standard bipolar output is two unbalanced output. However, two unbalanced output, or two balanced output can be added as an option. (See 2.1.2 )

The four NRZ patterns and one clock signal are applied to the unipolar output circuit, the NRZ pattern is shaped and the four signals are output. The clock signal is branched and extracted as two output.

The unipolar output level is standardly the the ECL level (H level: -1.1 ±0.1 V, L level: -1.52 ±0.1 V). However, 0/+2.4 V (compatible with TTL level) and 0/+3 V level are available as options. The standard code format is NRZ, but RZ is available as an option. In this case, the output level is limited to 0/+3 V.

17

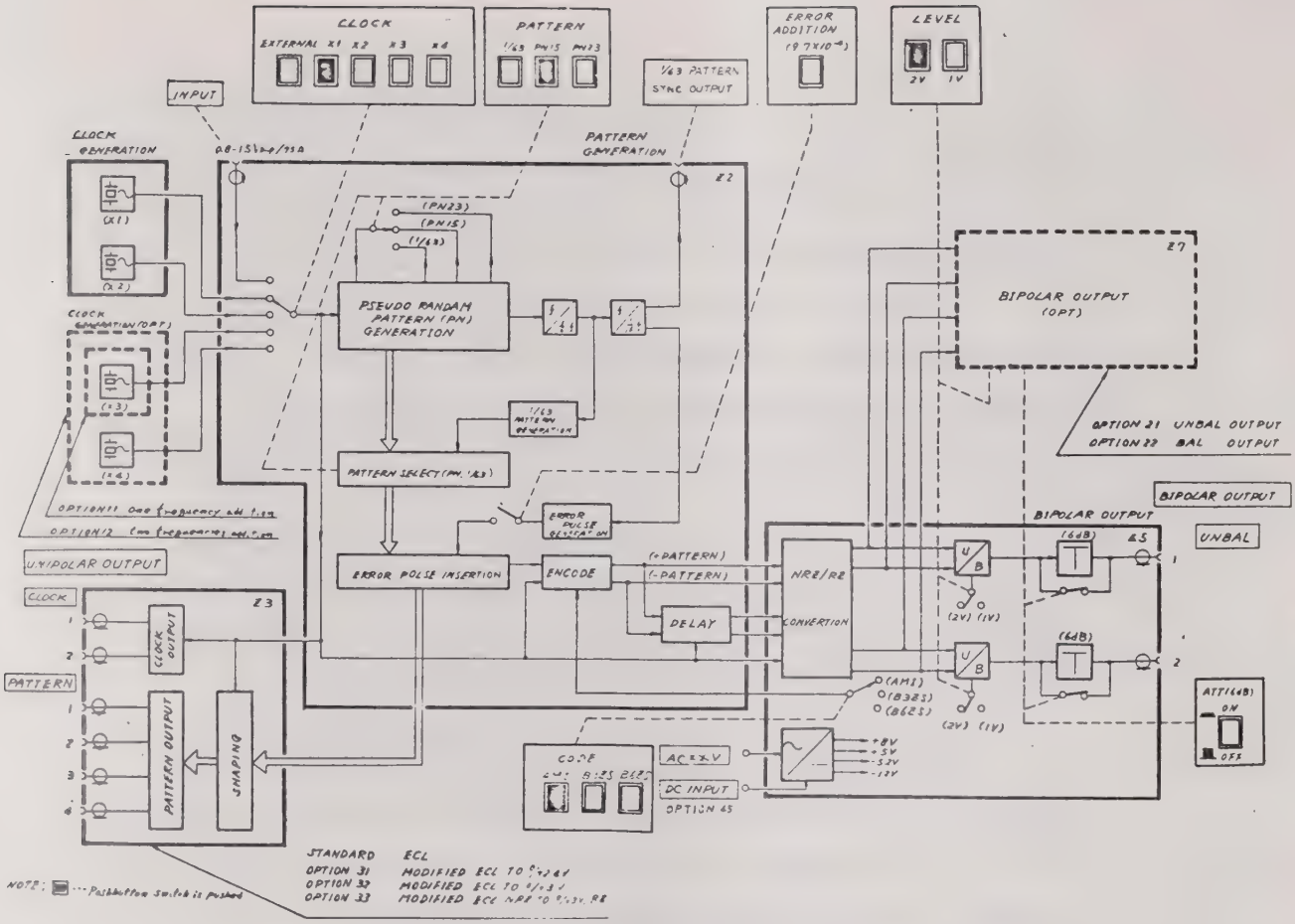


Fig. 3-6 ME448B Sending Unit Block Diagram

### 3.4.2 Receiving Unit

The receiving unit consists of a bipolar input circuit (not installed when there is no balanced input), unipolar input circuit, clock regenerator, error detector, counter, and display circuit.

The bipolar or unipolar signals (clock and pattern) from the system under test are applied to the receiving unit. The balanced bipolar signal is applied to the balanced input, and converted into an unbalanced signal. The unbalanced bipolar signal is applied to the unbalanced input.

One of these signals is applied to the error detector. The6 The 6 dB attenuator and 20 dB amplifier at the input are

switched and the 40 to 140 mVo-p (option) and 0.4 to 2.8 Vo-p levels are converted to the 0.4 to 1.4 Vo-p level. This signal is converted from bipolar to unipolar and (+) and (-) routes are shaped for application to the code converter. The (+) and (-) routes of the other signal are added and the resultant signal is applied to the clock regenerator.

Maximum four clock regenerators (1.544 MHz, 3.152 MHz, 6.312 MHz and 44.736 MHz) are available. One of four frequencies is standardly provided. Clocks signals of all four frequencies can be generated as an option. The clock regenerator consists of bit rate tuned circuits and waveshapers and regenerates the clock signal from the input RZ pattern signal. The (+) and (-) route pulses pass through the shaping circuit, code converter, and code violation error detector and code (AMI, B6ZS or B3ZS) violation errors are detected. The two NRZ patterns are decoded (reverse of the sending unit encoder) and a NRZ pattern is extracted.

Next, the unipolar signal is applied to the unipolar input circuit. The standard unipolar input circuit interface is the ECL level, but 0/+2.4 V (compatible with TTL level) and 0/+3 V levels are available as an option. This unipolar signal or the unipolar signal decoded from the bipolar signal is converted to 1/4 the speed of the input signal. The receiving unit reference pattern generator uses the regularity of the pseudo random pattern. This reference pattern is synchronized with the input pattern, bit-by-bit comparison is performed and error pulses are detected. The bit rate is converted to 1/4 of the input signal, this signal is branched to four routes, and after error detecting, it is converted to its original bit rate.

The counter receives and counts the binary errors

or code violation errors detected by the error detector. The count time at error rate measurement is produced by dividing the clock signal. Count times of $10^7$, $10^8$ and $10^9$ bits can be selected. For example, when 5 bits error pulses are detected in the count time of $10^7$ bits, the error rate is $5 \times 10^{-7}$.

The calculated result is stored in memory and applied to the display circuit. The count time for error pulse measurement can be set as desired with a manual switch. The count time is the time from when START/STOP switch is pushed until it is pushed again. The result is not memorized during error pulse measurement but is totalized and displayed each time an error pulse is detected. The counter circuit also produces a printer output signal and pen recorder output signal. INPUT ALARM, SYNC LOSS, ERRORS, OVERFLOW, DATA VALID, COUNTING and other status signals are produced and applied to the display circuit. The display circuit displays the measured result as a 2-digit mantissa and 1-digit exponent and also turns on the status LEDs.

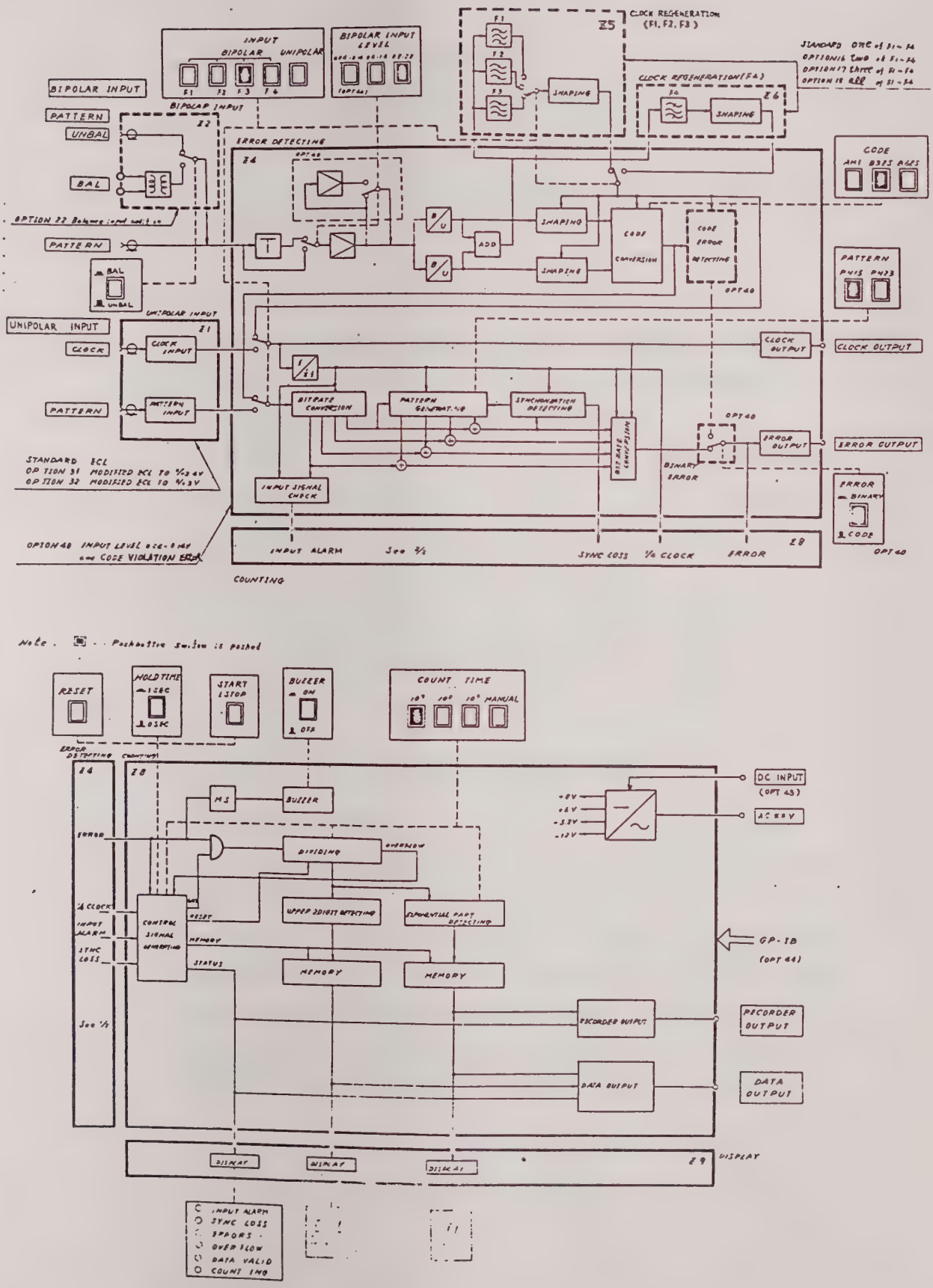


Fig. 3-7 ME448B Receiving Unit Block Diagram

SECTION 4

OPERATING INSTRUCTIONS

The circled index numbers in this manual correspond to the numbers in Figs. 4-2 and 4-3.

## 4.1 SAFETY MEASURES

This equipment actually has following electrical shock protection base on the European Safety Standards.

ac inlet (with two fuse holders)

⑯ ㊵ : IEC standards

Noise filter: IEC standards

Power switch ① ⑲ : Double pole type

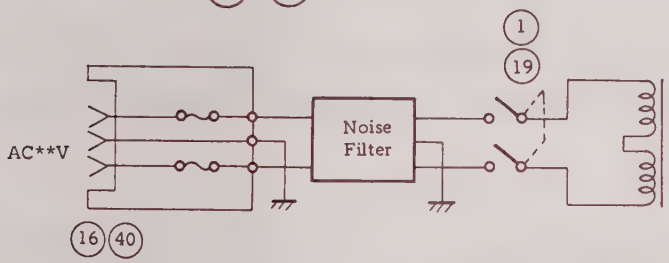


Fig. 4-1 ac Power Supply Circuit

### 4.1.1 Fuse Replacement

Two single-pole fuse holders are inside the AC inlet ⑯ ㊵ .

First, turn off the power switch ① ⑲ and remove the power connector inserted at the ac inlet. Next, remove the fuse holder above the ac inlet with a screw-driver or other similar tool and replace the fuse inside the holder with a spare fuse.

### 4.1.2 Precautions When Changing From a Low Temperature to a High Temperature

After using the ME448B for a long time at a low temperature (such as 0°C), allow the equipment to dry thoroughly to prevent shorting of the circuits by water drops before turning on the power again.

## 4.2 INSTALLATION ENVIRONMENT

The ME448B will operate properly in an ambient temperature of 0 to 50°C. However, do not use it at the following places:

(1) Where severe vibrations occur.

(2) Where moisture and dust are prevalent.

(3) In direct sunlight.

It is recommended that the equipment should be used at room temperature to ensure long-term stable operation.

## 4.3 POWER

### 4.3.1 ac Power Operation

The ME448B will operate normally on [**] V ac ±10%, 50/60 Hz. To connect the power supply cord, proceed as follows:

| Step | Procedure |
|---|---|
| 1 | Confirm that the ac line voltage is [**] V ±10%. |
| 2 | Insert socket of the power supply cord into the ac inlet (16) (40) of the equipment and connect the plug to the [**] V ac line. |
| 3 | Connect the ground terminal to ground wire of the 3-wire power supply cord or the ⏚ terminal on the rear panel of the equipment to a ground. |

| Step | Procedure |
|---|---|
| | CAUTION: Since the BAL output and BAL input G terminals are used as the measuring system ground terminals when the equipment is equipped with Option 22, do not connect them to an earth ground. |
| 4 | When turning off the power, set the POWER switch (1) (19) to the OFF position, then disconnect the power supply cord. |

4.3.2 dc Power Operation

The ME448B (with Option 45) can be operated from the DC power supply of the terminal by using it with the MZ102A DC-DC Converter. The following explains this procedure. Table 4-1 lists the ME448B DC input connector (15) (39) pin numbers and input voltage.

| Step | Procedure |
|---|---|
| 1 | Confirm that the terminal dc power output voltage is within the input voltage range of the MZ102A. |
| 2 | Connect the terminal dc power output connector to the MZ102A dc voltage input connector with a connection cord. Connect the MZ102A dc voltage output connector and ME448B sending unit and receiving unit dc voltage input connectors (15) (39) with the power supply cord (MZ102A accessory). |
| 3 | Connect the MZ102A and the ME448B sending unit and receiving unit ⏚ terminals (12) (37) to an earth ground. |
| 4 | Set the DC/AC switch (14) (38) on the rear panel of the ME448B sending unit and receiving unit to the DC position. |

| Step | Procedure |
|---|---|
| | The equipment can be operated when the MZ102A and ME448B sending unit and receiving unit POWER switch (1) (19) is set to the ON position in this state. |
| 5 | When turning off the power, set the MZ102A and ME448B sending unit and receiving unit POWER switches (1) (19) to OFF, then disconnect the power supply cord. |

Table 4-1 ME448B DC Input Connector (15) (39) Pin Numbers and Input Voltage

| (15) (39) Pin Number | Input Voltage |
|---|---|
| 1 | +8 V |
| 2 | +5 V |
| 3 | +5 V |
| 4 | -5.2 V |
| 5 | -5.2 V |
| 6 | -12 V |
| 7 | GND |
| 8 | GND |

## 4.4 PANEL DESCRIPTION

Fig. 4-2 is the external view of the sending unit and Fig. 4-3 is the external view of the receiving unit. Table 4-2 and Table 4-3 explain controls used to operate the sending and receiving unit respectively.

Table 4-2 ME448B Sending Unit

| No. | Indication | Description |
|---|---|---|
| ① | POWER ON/OFF | Power switch. |
| ② | CLOCK<br>EXTERNAL X1 X2 X3 X4<br>1kHz-50MHz | Clock signal bit rate selector<br>EXTERNAL:<br>Used when operating the equipment with an external clock (1 kHz to 50 MHz)<br>X1 to X4:<br>Used when operating the equipment with the internal clock.<br>X1 and X2 are standard.<br>X3 and X4 are optional. |
| ③ | INPUT<br>0.8-1.5 Vp-p/75Ω | External clock input connector |
| ④ | ERROR<br>ADDITION<br>($9.7 \times 10^{-4}$) | $9.7 \times 10^{-4}$ binary errors are inserted while this switch is being pressed. However, a code violation error is not inserted. |
| ⑤ | UNIPOLAR OUTPUT [*] | Unipolar signal output connectors |
| ⑥ | CLOCK 1 2 PATTERN 1 2 3 4 | Two clock signal outputs and four unipolar pattern outputs. Pattern outputs 1 to 4 are sequentially delayed by 1/4 period each when the PATTERN switch ⑦ is set to PN15. [*] are marked as follows, depending upon option. |

Table 4-2 ME448B Sending Unit (Cont)

| No. | Indication | Description |
|---|---|---|
| | | Standard [ECL]<br>OPTION 31 [0/+2.4 V ≦ 10 MHz]<br>OPTION 32 [0/+3 V]<br>OPTION 33 [0/+3 V, RZ] |
| ⑦ | PATTERN<br>1/63 PN15 PN23 | 1/63 isolated pattern, PN15 or PN23 selector switch. |
| ⑧ | CODE<br>AMI B3ZS B6ZS | Bipolar signal code selector switch |
| ⑨ | LEVEL<br>BAL 3 V 3 V<br>UNBAL 2 V 1 V | Bipolar signal output level selector switch. The output level is changed only for unbalanced output. |
| ⑩ | ATT (6 dB)<br>ON OFF | Bipolar signal output variable attenuator. Unbalanced output and balanced output can be varied by 6 dB. |
| ⑪ | PATTERN<br>(BAL) (UNBAL)<br>1 2 1 2 | Bipolar signal output connectors.<br>Standard: two UNBAL outputs<br>Option 21: four UNBAL outputs<br>Option 22: two UNBAL outputs and two BAL outputs<br>UNBAL (unbalanced) output: 100 Kbit/s to 50 Mbit/s<br>BAL (balanced) output option: 1 Mbit/s to 6.5 Mbit/s<br>Output 2 is delayed by 6 bits from output 1. |

Table 4-2 ME448B Sending Unit (Cont)

| No. | Indication | Description |
|---|---|---|
| ⑪A | UNDERSHOOT (BAL) ON OFF | ON/OFF switch for balanced bipolar output undershoot (1.544 Mbit/s only) |
| ⑫ | ⏚ | Ground terminal |
| ⑬ | 1/63 PATTERN SYNC OUTPUT | 1/63 isolated pattern synchronization signal output connector (for waveform observation). |
| ⑭ | AC/DC | AC or DC operation selector switch. (Only equipped with option 45). |
| ⑮ | DC INPUT | DC power supply input connector. (Only equipped with Option 45). |
| ⑯ | AC [**] V [***] A | AC inlet with two fuse holders. |
| ⑰ | | Cooling fan |
| ⑱ | CLOCK (OPTION) | Internal clock option plug-in section. |

Table 4-3 ME448B Receiving Unit

<table>
<tr><th>No.</th><th>Indication</th><th>Description</th></tr>
<tr><td>⑲</td><td>POWER ▂ON OFF▪</td><td>Power switch. All LEDs turn on for about 3 seconds when this switch is set to ON.</td></tr>
<tr><td>⑳</td><td>INPUT<br>BIPOLAR UNIPOLAR<br>F1 F2 F3 F4</td><td>Input signal selector switch. Bipolar signals of four frequencies (F1, F2, F3, F4) can be selected. (One frequency is standard)<br>F1: 1.544 Mbit/s<br>F2: 3.152 Mbit/s<br>F3: 6.312 Mbit/s<br>F4: 44.736 Mbit/s<br>The unipolar signal operates at 1 Kbit/s to 50 Mbit/s.</td></tr>
<tr><td>㉑</td><td>PATTERN<br>PN15 PN23</td><td>Receiving pattern selector switch PN15 .. $2^{15}$-1 bits repeated pattern, PN23 ... $2^{23}$-1 bits repeated pattern.</td></tr>
<tr><td>㉒</td><td>ERROR<br>▂ BINARY/CODE▪</td><td>Binary errors measurement/code violation errors measurement selector switch. (Only when equipped with OPTION 40.)</td></tr>
<tr><td>㉓</td><td>CODE<br>AMI B3ZS B6ZS</td><td>Bipolar signal code selector switch.</td></tr>
<tr><td>㉔</td><td>LEVEL<br><table><tr><td>BAL</td><td>0.12 - 0.36 V</td><td>1.2 - 3.6 V</td><td>1.2 - 3.6 V</td></tr><tr><td>UNBAL</td><td>40 - 140 mV</td><td>0.4 - 1.4 V</td><td>0.8 - 2.8 V</td></tr></table></td><td>Bipolar signal input level range selector switch. 0.12 - 0.36 V, 40 - 140 mV are for high impedance measurement, and equipped only with OPTION 40.</td></tr>
</table>

Table 4-3 ME448B Receiving Unit (Cont)

| No. | Indication | Description |
|---|---|---|
| (25) | PATTERN<br>(UNBAL) 75Ω (BAL) | Bipolar signal input connectors. BAL (balanced) is the F1 and F2 balanced input connector (OPTION 22). UNBAL (Unbalanced) is the F1, F2, F3 and F4 unbalanced input connector. |
| (25A) | BAL UNBAL | Bipolar input signal selector switch (Only equipped with option 22) |
| (26) | UNIPOLAR INPUT<br>[*]<br>CLOCK 75Ω PATTERN 75Ω | Unipolar signal input connector. [*] are marked as follows depending upon options.<br>Standard [ECL]<br>OPTION 31 [0/+2.4 V ≦ 10 MHz]<br>OPTION 32 [0/+3 V] |
| (27) | BUZZER<br>ON OFF | ON/OFF switch for alarm buzzer that sounds when an error pulse is detected. |
| (28) | START/STOP | Manual counting start/stop switch used during error pulse measurement. |
| (29) | COUNT TIME (bits)<br>$10^7$ $10^8$ $10^9$ MANUAL<br>N=2-7 3-8 4-9<br>ERROR RATE $10^{-N}$ | Counting time selector switch. Error rate measurement counting time can be switched in ranges of $10^7$, $10^8$, or $10^9$ bits. Error pulse measurement counting time can be set with switch (28) after pressing the MANUAL button. |

Table 4-3 ME448B Receiving Unit (Cont)

| No. | Indication | Description |
|---|---|---|
| (30) | HOLD TIME<br>1 SEC 0 SEC | Display hold time selector switch for display (32) |
| (31) | RESET | When the RESET switch is pressed, the count and status data are erased and the next measurement is immediately started. |
| (32) | | Error rate or error pulse count display and status data display. The error rate or error pulse count is displayed as a 2-digit mantissa and 1-digit exponent. |
| | INPUT ALARM (red LED) | Turns on when there is no input clock signal or pattern and when the pattern is all ones or all zeros. |
| | SYNC LOSS (red LED) | Turns on when sending and receiving pattern synchronization is lost. (See 4-40) |
| | OVERFLOW (red LED) | Turns on when the measured result exceeds the display range. |
| | ERRORS (red LED) | Turns on when an error pulse is detected. |
| | DATA VALID (green LED) | Turn on since the end of the 1st measurement during error rate measurement. Turns on since error pulse measurement starts. However, it does not turn on while INPUT ALARM, SYNC LOSS, or OVERFLOW is lit.<br>Note:<br>DATA VALID turns on even when |

Table 4-3 ME448B Receiving Unit (Cont)

| No. | Indication | Description |
|---|---|---|
| | | the input level is below the prescribed input level. However, since the correct measured result is not displayed, always input an input; level within the prescribed range. |
| | COUNTING (green LED) | Turns on during the counting time. |
| | REMOTE (red LED) | Turns on during remote control operation by GP-IB (only when equipped with OPTION 44). |
| (33) | DATA OUTPUT | Printer output connector |
| (34) | CLOCK OUTPUT<br>1 - 2 V/75Ω | Clock output connector |
| (35) | ERROR OUTPUT<br>1 - 2 V/75Ω | Error pulse output connector |
| (36) | RECORDER OUTPUT<br>+ - | Pen recorder output connector 10 steps dc voltage correspond to exponential parts of error rate and status data is output. |
| (37) | ⏚ | Ground terminal |
| (38) | AC/DC | AC operation/DC operation selector switch. (only when equipped with OPTION 45.) |
| (39) | DC INPUT | DC power input connector (only when equipped with OPTION 45.) |
| (40) | AC ** V **** A | AC inlet with two fuse holders |

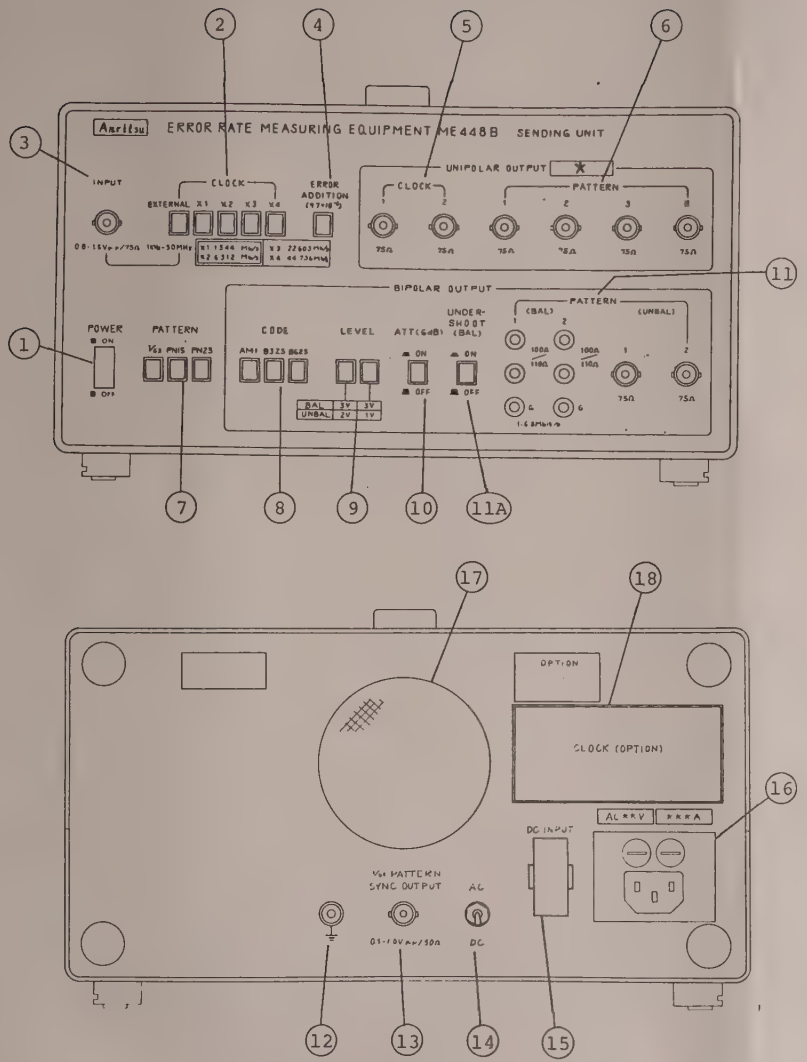


Fig. 4-2 ME448B Sending Unit (with OPTIONS 12, 22)
External Views

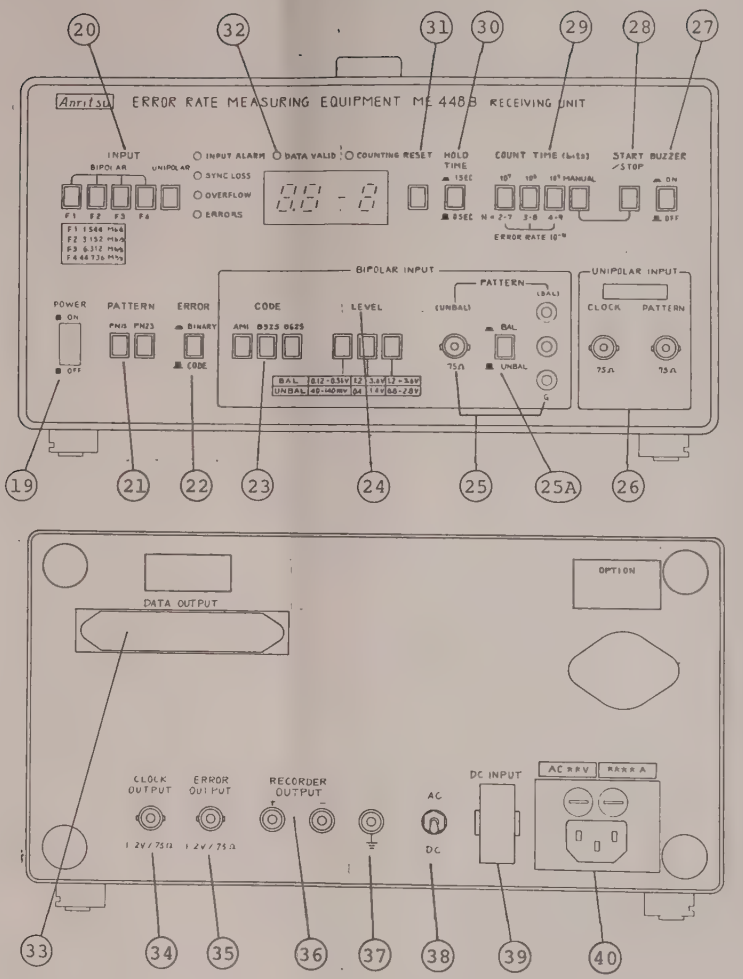


Fig. 4-3 ME448B Receiving Unit (with OPTIONS 17, 22, 40)
External Views

## 4.5 MEASUREMENT PREPARATIONS

Connect the sending unit to the receiving unit and perform the following back to back test.

### 4.5.1 Unipolar Signal

| Step | | Procedure |
|---|---|---|
| 1 | Sending unit | POWER (1) .... ON |
| | Receiving unit | POWER (19) .... ON (All LEDs turn on for about 3 seconds) |
| 2 | Sending unit | Select the bit rate and pattern (PN15 or PN23) with the CLOCK (2) and PATTERN (7) switches. |
| 3 | Receiving unit | INPUT (20) ... Push UNIPOLAR |
| | | PATTERN (21) .. Set to the same pattern as that of the sending unit. The receiving unit INPUT ALARM lamp (32) turns on. |
| 4 | | Connect the sending unit pattern output connector (6) and clock output connector (5) to the receiving unit pattern input connector and clock input connector (26) with the supplied measuring cord. Receiving unit INPUT ALARM lamp (32) turns off. |
| 5 | | Set the receiving unit COUNT TIME switch (29) to MANUAL and press the START/STOP switch (28). The COUNTING and DATA VALID lamps (32) turn on. |
| 6 | | Press the receiving unit START/STOP switch (28) again. The COUNTING lamp (32) goes off, but the DATA VALID lamp (32) remains on. |

| Step | Procedure |
|---|---|
| 7 | Set the receiving unit COUNT TIME switch (29) to $10^7$ and the HOLD TIME switch (30) to 0 SEC. Press the RESET switch (31). The COUNTING lamp (32) turns on and 0.0-7 appears on the display. At the end of the first measurement, the DATA VALID lamp (32) turns on and 0.0-7 display remains unchanged (in normal operation). |
| 8 | Continuously press the sending unit ERROR ADDITION switch (4). |
| 9 | Press the receiving unit RESET switch (31). The COUNTING and ERROR lamps (32) turn on and the DATA VALID lamp (32) turns off. Confirm that the DATA VALID lamp (32) turns on again and that 9.7-4 appears on the display. |
| 10 | Set the receiving unit COUNT TIME switch (29) to MANUAL and press the START/STOP switch (28). |
| 11 | Continuously press the sending unit ERROR ADDITION switch (4). Confirm that the total number of errors counted appears on the receiving unit display. |

This completes unipolar signal measurement preparations.

4.5.2 Bipolar Signal

| Step | | Procedure | |
|---|---|---|---|
| 1 | Sending unit | CLOCK (2) ..... | Select the desired bit rate |
| | | PATTERN (7) ... | Select the desired pattern. (PN15 or PN23) |
| | | CODE (8) ..... | Select the line code |
| | | LEVEL (9)<br>ATT (10) ..... | Set the signal level |
| 2 | Receiving unit | INPUT (20) .... | Set to the same bit rate as that of the sending unit. |
| | | CODE (23) ..... | Set to the same line code as that of the sending unit. |
| | | LEVEL (24) .... | Set to the range that satisfies the sending unit level. |
| | | BAL/UNBAL<br>(25A) ..... | Select the input signal format (Balanced signal or unbalanced signal) |

The receiving unit INPUT ALARM lamp (32) turns on.

3 Connect the sending unit pattern output connector 11 to the corresponding receiving unit pattern input connector (25) with the supplied measuring cord. The receiving unit INPUT ALARM lamp (32) turns off.

Note: When the equipment is equipped with OPTION 22, only bipolar signals from the BAL input can be measured when the receiving bit rate is F1 or F2 and the UNBAL input can be measured at any receiving bit rate of F1 to F4.

| Step | Procedure |
|---|---|
| 4 | Set the receiving unit ERROR switch (22) to BINARY. |
| 5 | Check the equipment operation as explained in Section 4.5.1 step 5 to 11.<br><br>This completes preparation for bipolar signal measurement. |

## 4.6 MEASUREMENT

### 4.6.1 Loop-back Measurements on a Digital Multiplex Equipment (MPX, DEMPX)

Fig. 4.4 shows the connections for 6.312 Mbit/s (1.544 Mbit/s X4) digital multiplex equipment loop-back measurement.

Since four bipolar signals are applied to the MPX from the ME448B, the ME448B must be equipped with OPTION 21. The measurement procedure is explained below:

| Step | Procedure |
|---|---|
| 1 | Set the sending unit CLOCK switch (2) to 1.544 Mbit/s (X1 for Fig. 4-1) and set the receiving unit INPUT switch (20) to BIPOLAR F1. |
| 2 | Set the sending unit and receiving unit PATTERN switch (7) (21) to PN15 and set the CODE switch (8) (23) to AMI. |
| 3 | Set the sending unit LEVEL switch (9) to UNBAL 2V and set the ATT switch (10) to OFF. Then the 2Vo-p bipolar signal can be transmited from the PATTERN 1 to 4 outputs. |
| 4 | Set the receiving unit LEVEL switch (24) to the 0.4 - 1.4V range and set BAL/UNBAL switch (25A) to UNBAL. |
| 5 | Set the receiving unit COUNT TIME switch (29) to $10^7$ and the HOLD TIME switch (30) to 0 SEC. |

| Step | Procedure |
|---|---|
| 6 | Connect sending unit BIPOLAR OUTPUT (11) outputs 1 to 4 to inputs 1 to 4 of the MPX with the supplied cable. |
| 7 | Sequentially connect the receiving unit BIPOLAR INPUT (UNBAL) input (25) to DMPX output 1 to 4 and measure the error rate. |

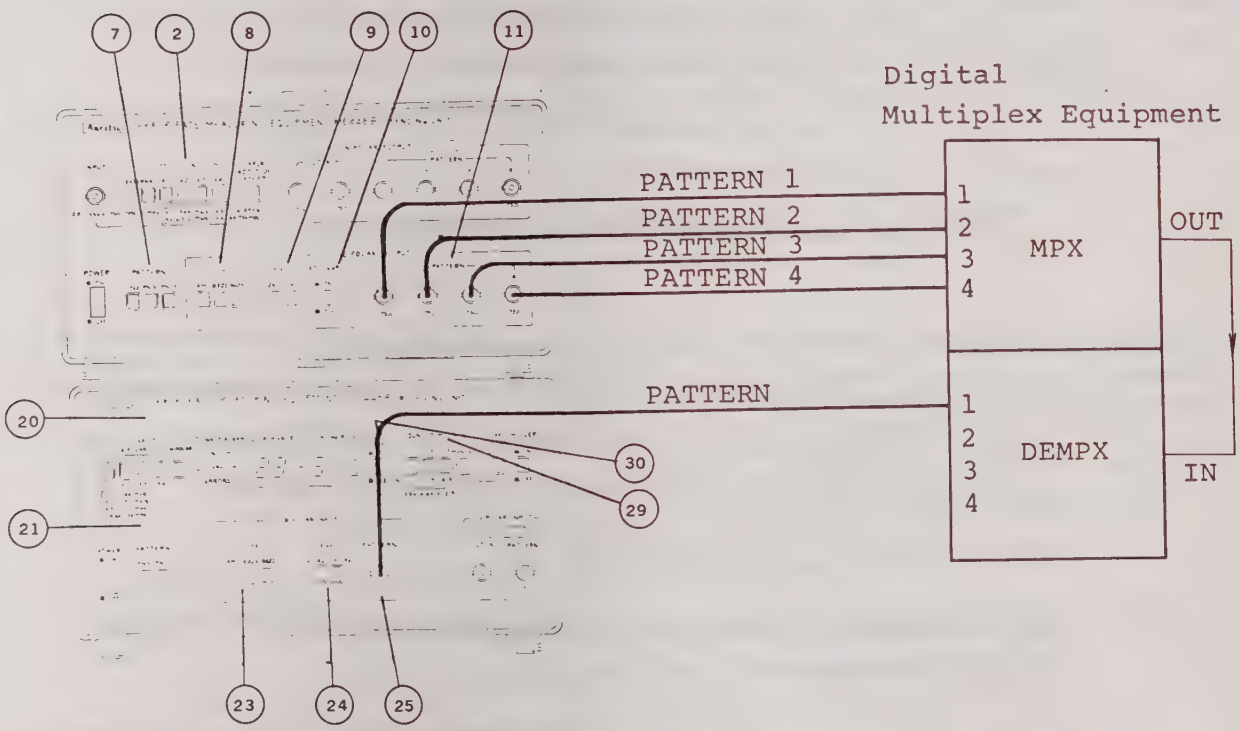


Fig. 4-4 Digital Multiplex Equipment and ME448B Connections

### 4.6.2 Binary Error Rate Measurement on a Digital Radio System

4PSK (4-phase shift keying modulation), 8PSK (8-phase shift keying modulation) and 16QAM (16 quadrature amplitude modulation) are generally used as digital radio system modulation method. The ME448B can measure the binary error rate of digital radio systems of either modulation by end-to-end or loop-back tests.

Fig. 4-5 is an example connecting a 4PSK (44.736 Mbit/s x 2) digital radio system and the ME448B.

Fig. 4-6 is an example connecting an 8PSK (44.736 Mbit/s x 3) digital radio system and the ME448B.

Fig. 4-7 is an example connecting a 16QAM (44.736 Mbit/s x 4) and the ME448B.

Perform measurement as explained below.

| Step | Procedure |
|---|---|
| 1 | Set the sending unit CLOCK switch (2) to [X] Mbit/s and the receiving unit INPUT switch (20) to UNIPOLAR.<br>Note: Select [X] from X1 to X4. |
| 2 | Set the sending unit and receiving unit PATTERN switch (7) (21) to PN15. |
| 3 | Set the receiving unit COUNT TIME switch (29) to $10^7$ and the HOLD TIME switch (30) to 0 SEC.<br>Note: When the COUNT TIME is set to $10^7$, error rates from $1 \times 10^{-7}$ to $9.9 \times 10^{-3}$ can be measured. When the error rate is less than $1 \times 10^{-7}$, set the COUNT TIME switch (29) to $10^8$ or $10^9$. |
| 4 | Connect the ME448B sending unit and equipment as follows: |

| Step | Procedure |
|---|---|
| | Connect the ME448B sending unit CLOCK 1 (or 2) connector (5) to the clock input connector of the sending side terminal equipment with the supplied cable.<br>Then connect the sending unit PATTERN connectors (6) to the pattern input connectors of the terminal equipment with the supplied cable.<br>The ME448B sending unit output four unipolar patterns. Send two of these patterns to the terminal equipment when testing a 4PSK digital radio system, three of these patterns when testing 8PSK digital radio equipment, and all four patterns when testing a 16QAM digital radio system. |
| 5 | Connect the ME448B receiving unit as follows:<br>(1) End-to-end test<br>Connect the output of the receiving side terminal equipment to the UNIPOLAR INPUT connector (26) of the ME448B receiving unit. Connect the clock signal input and output connectors and the unipolar pattern input and output connectors with the supplied cable.<br>The binary error rate can be measured after the these operations have been completed.<br>(2) Loop-back test<br>Connect the clock and pattern input and output connectors of the receiving side terminal equipment with a U-link or a cable of the same length and send the signal back to the sending side terminal equipment. The cable connections are the same as those for the end-to-end test. |

| Step | Procedure |
|---|---|

Note: The ME448B pattern and clock signal input/output phase relationship is shown below.

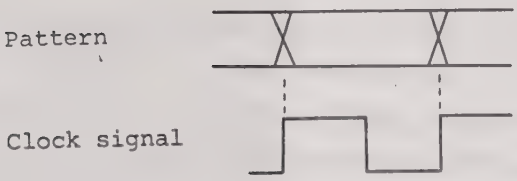


Note: Since the number of unipolar measurement patterns output is 2 for 4PSK, 3 for 8PSK and 4 for 16QAM, measure these outputs sequentially by switching the cable connections.

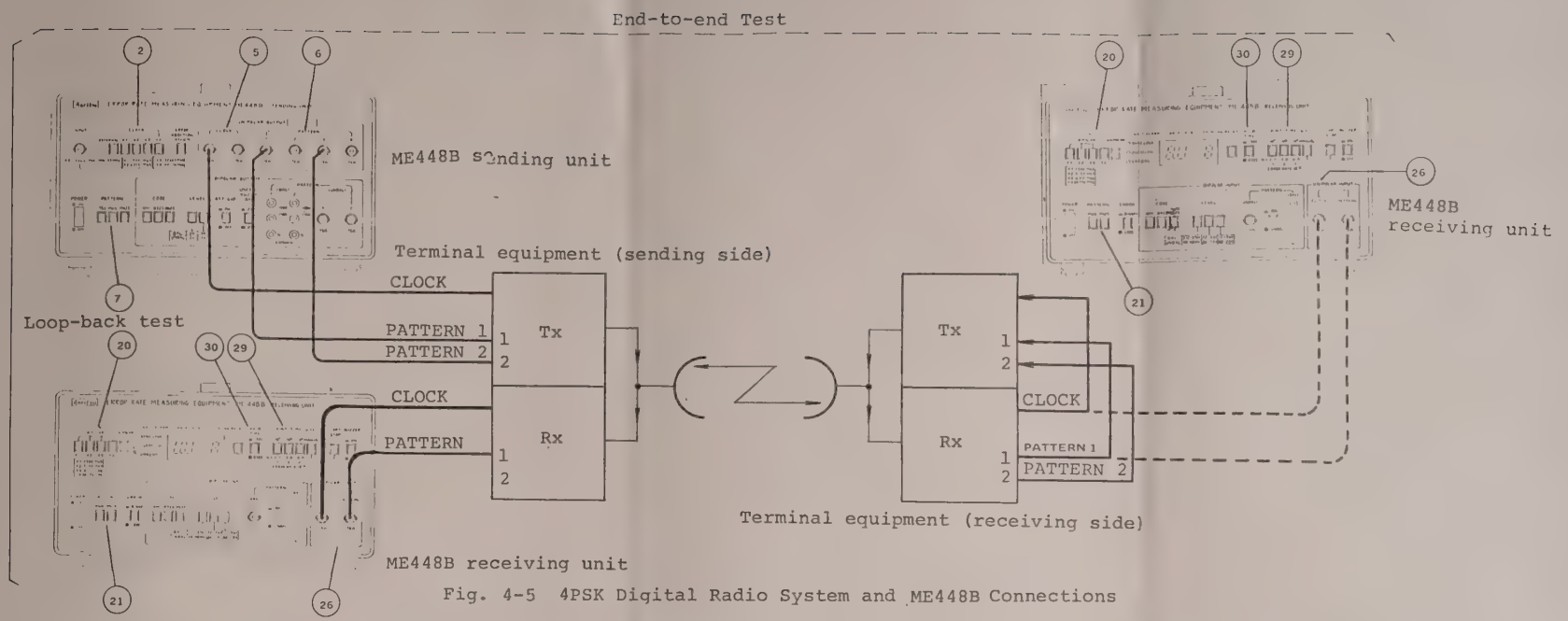


Fig. 4-5 4PSK Digital Radio System and ME448B Connections

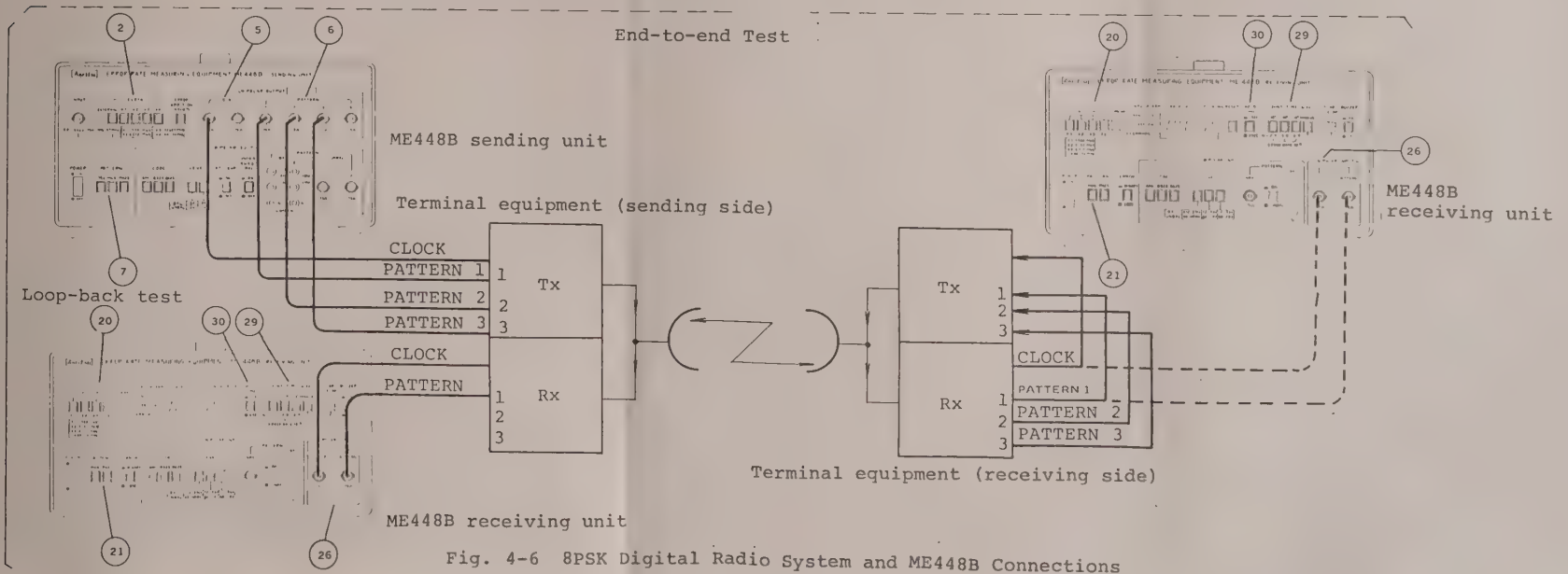


Fig. 4-6 8PSK Digital Radio System and ME448B Connections

### 4.6.3 Binary Error Rate Measurement on a Digital Line System

Table 4-4A and 4-4B shows the hierarchy of a PCM 24CH digital line system.

Table 4-4A PCM 24CH Hierarchy (North America)

| Hierarchy / Item | Order | | |
|---|---|---|---|
| | 1st Order | 2nd Order | 3rd Order |
| Bit rate | 1.544 or 3.152 Mbit/s | 6.312 Mbit/s | 44.736 Mbit/s |
| Line code | AMI | B6ZS | B3ZS |
| Interface level | 3Vo-p/100Ω balanced | 3Vo-p/110Ω balanced | 2Vo-p/75Ω unbalanced |

Table 4-4B PCM 24CH Hierachy (Japan)

| Hierarchy / Item | Order | | |
|---|---|---|---|
| | 1st Order | 2nd Order | 3rd Order |
| Bit rate | 1.544 Mbit/s | 6.312 Mbit/s | 32.064 Mbit/s |
| Line code | AMI | AMI | AMI |
| Interface level | 3Vo-p/110Ω balanced | 2Vo-p/75Ω unbalanced | 2Vo-p/75Ω unbalanced |

The ME448B can measure the binary error rate of 1st to 3rd order digital line systems. The ME448B must be equipped with OPTION 22 for PCM 1st and 2nd order measurement.

Fig. 4-7 shows connections when using the ME448B to measure the binary error rate of a PCM 3rd order (North America) digital line system by end-to-end or loopback measurement.

Perform measurement as follows:

| Step | Procedure |
|---|---|
| 1 | Set the sending unit CLOCK switch (2) to 44.736 Mbit/s (X4 for Fig. 4-2) and set the receiving unit INPUT switch (20) to BIPOLAR F4. |
| 2 | Set the sending unit and receiving unit PATTERN switch (7) (21) to PN15 and the CODE switch (8) (23) to B3ZS. |
| 3 | Set the sending unit LEVEL switch (9) to UNBAL 2V and the ATT switch (10) to OFF. Then 2 Vo-p bipolar pattern is output from the BIPOLAR OUTPUT PATTERN (UNBAL) output connector (11). |
| 4 | Set the receiving unit LEVEL switch (24) to the UNBAL 0.8 - 2.8 V range and set BAL/UNBAL switch (25A) to UNBAL. |
| 5 | Set the receiving unit COUNT TIME switch (29) to $10^7$ and the HOLD TIME switch (30) to 0 SEC. |
| 6 | Connect the ME448B sending unit BIPOLAR (UNBAL) PATTERN 1 (or 2) connector (11) to the bipolar pattern input connector of the sending side terminal equipment with the supplied cable. |
| 7 | Connect the ME448B receiving unit to the terminal equipment as follows:<br>(1) End-to-end test<br>Connect the bipolar signal output connector of the receiving side line terminal equipment to the BIPOLAR INPUT (UNBAL) connector (25) of the ME448B receiving unit with the supplied cable.<br>The binary error rate can be measured after the above operations are completed.<br>(2) Loop-back test<br>Connect the bipolar signal input and output connectors of the receiving side line terminal |

| Step | Procedure |
|---|---|
| | equipment with a U-link or cable and send the signal back to the sending side line terminal equipment.<br><br>The cable connections are the same as those for the end-to-end test. |

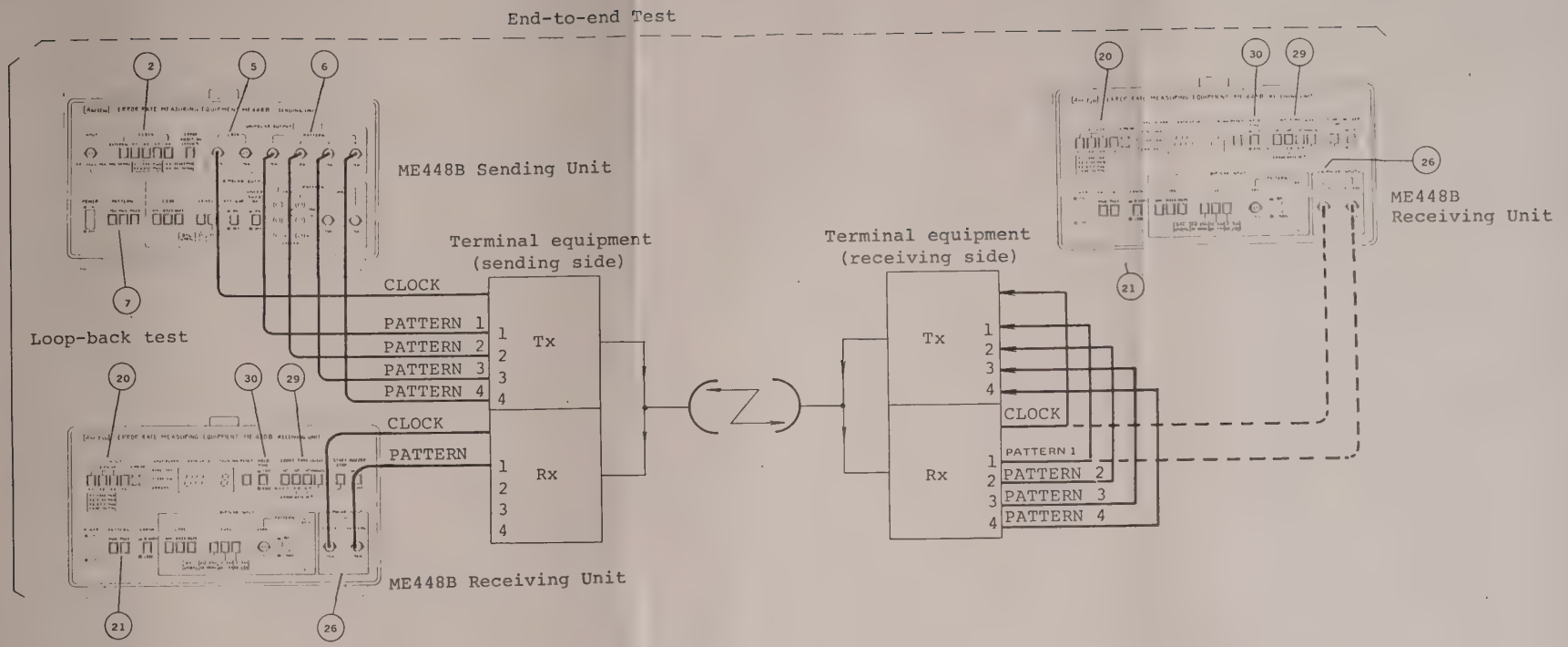


Fig. 4-7 16QAM Digital Radio System and ME448B Connections

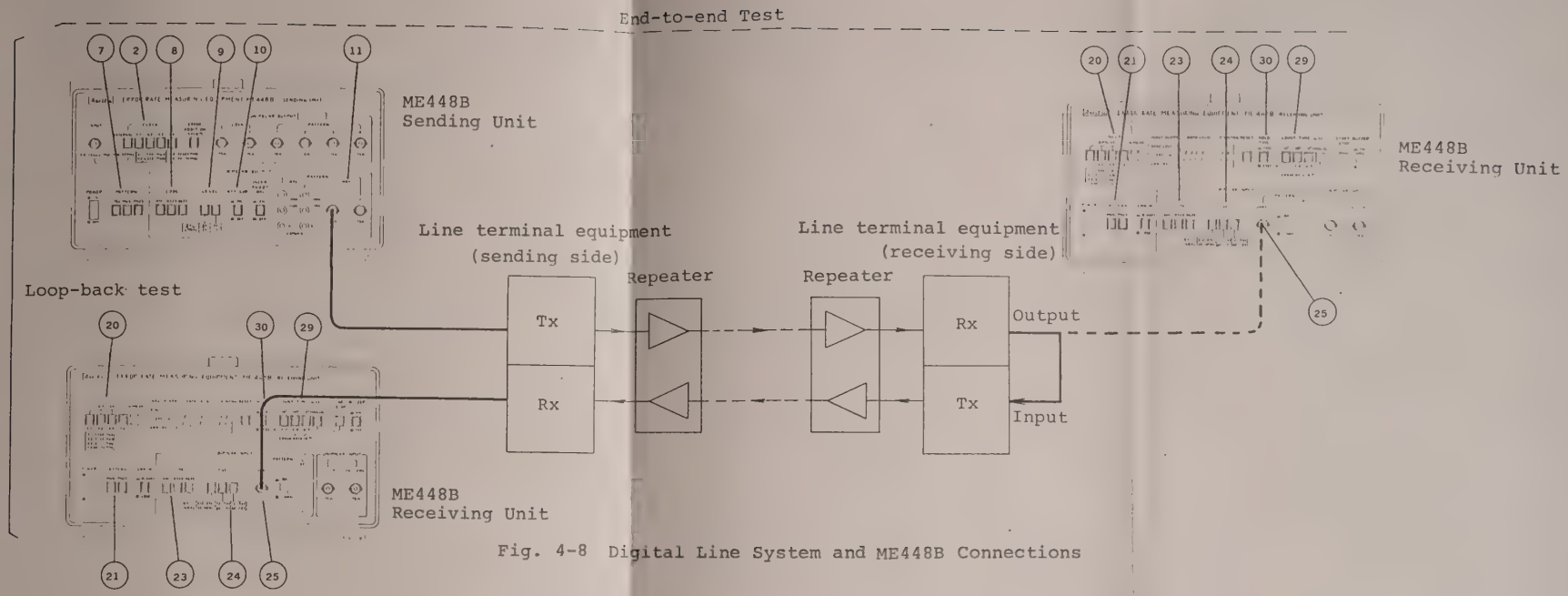


Fig. 4-8 Digital Line System and ME448B Connections

### 4.6.4 Code Violation Errors Measurement while Digital Line System is in Service

PCM line code violation errors can be measured by extracting the PCM signals from the line system in service at a high impedance so as not to affect the line.

The ME448B is used with a transducer to permit this measurement. When measuring a balanced signal system, use an ME448B equipped with OPTIONS 22, 40 and 43 (balanced signal transducer). When measuring an unbalanced signal system, use an ME448B receiving unit equipped with OPTION 40 and 42 (unbalanced signal transducer).

Fig. 4-10 shows the balanced signal system and ME448B connections and Fig. 4-9 shows the unbalanced signal system and ME448B connections.
Operation when measuring code violation errors of a PCM 2nd order (44.736 Mbit/s, unbalanced signal) system will be used as an example.

| Step | Procedure |
|---|---|
| 1 | Set the receiving unit INPUT switch (20) to BIPOLAR F4. |
| 2 | Set the receiving unit ERROR switch (22) to CODE, the CODE switch (23) to B3ZS, the LEVEL switch (24) to UNBAL 40 - 140 mV, BAL/UNBAL switch (25A) to UNBAL, and the COUNT TIME switch (29) to MANUAL. |
| 3 | Connect one side of the unbalanced signal transducer to the output connector of the line system in service and the other to the receiving unit BIPOLAR INPUT (UNBAL) connector (25) with the supplied cable. |
| 4 | The code violation errors can be measured by pressing the receiving unit START/STOP switch (28). When the START/STOP switch (28) is pressed again, error pulse measurement stops and the total number of error pulses occurred during that period is kept in memory. |

| Step | Procedure |
|---|---|
| | To sound the buzzer alarm whenever an error pulse is generated, set the BUZZER switch (27) to ON. |

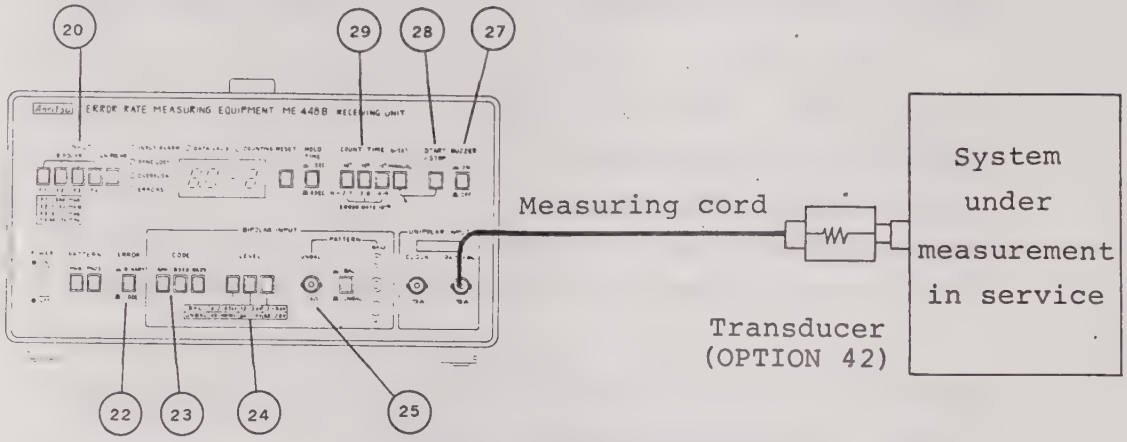


Fig. 4-9 Unbalanced Signal System and ME448B Connections

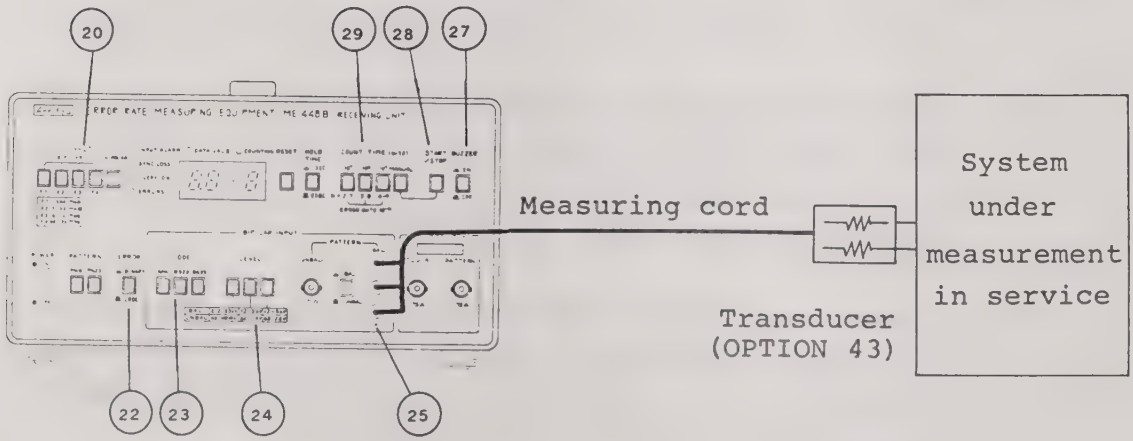


Fig. 4-10 Balanced Signal System and ME448B Connections

### 4.6.5 ME448B and Peripheral Device Connections

(1) Connection to MH047A Digital Printer

The MH047A Digital Printer receives the binary error rate or error pulses display data from the ME448A and simultaneously prints the data and time (day, hour, minute, second).
Fig. 4-12 shows the ME448B receiving unit and MH047A connections. Connect the DATA OUTPUT connector (33) on the rear panel of the ME448B receiving unit to the DATA INPUT connector of the MH047A with the connecting cable supplied with the MH047A. The 2 digit mantissa and 1 digit exponent of the display are output from the ME448B in BCD code (negative logic) at TTL level. Table 4-5 shows the connector 33 pin numbers and output signals.

The print format for this data is shown below.

1) When an error is detected during error rate measurement.

   (a) Error rate is $9.7 \times 10^{-4}$ — 9.7-4

   (b) For overflow — *.*-*

   (c) Error rate ($1.0 \times 10^{-7}$) and day, hour, minute (10th, 23:08)

   1st line: 10.23.08
   2nd line: ⟵ 8 spaces ⟶ 1.0-7

2) When synchronization is lost during error rate measurement. — *.*-* S (one space)

3) When synchronization is recovered during error rate measurement and COUNT TIME is set to $10^7$ bits. — 0.0-7

4) When counting starts for error pulse measurement 0.0*0

5) When counting stops for error pulse measurement

(a) When the error pulse count is $9.7 \times 10^4$ 9.7*4

(b) For overflow *.***

6) When synchronization is lost during error pulse measurement *.*** S (one space)

Note: TTL level — Negative logic

"0" level ..... 2V to 5V

"1" level ..... 0V to 0.8V

Table 4-5 Data Output Signals

| Connector (33) pin number | Output signal | | Connector (33) pin number | Output signal |
|---|---|---|---|---|
| 1 | Exponent digit BCD | 1 | 26 | +5V |
| 2 | | 2 | 27 | GND |
| 3 | | 4 | 28 | GND |
| 4 | | 8 | 29 | GND |
| 5 | High level while error rate measurement / Low level while error pulse measurement | | 30 | +5V |
| | | | 31 | GND |
| | | | 32 | GND |
| 6 | GND | | 33 | GND |
| 7 | High level while error rate measurement / Low level while error pulse measurement | | 34 | +5V |
| | | | 35 | GND |
| | | | 36 | GND |
| | | | 37 | +5V |
| 8 | GND | | 38 | +5V |
| 9 | Mantissa ($10^0$) digit BCD | 1 | 39 | Low level when synchronization is lost. / High level when synchronization is locked-in. |
| 10 | | 2 | | |
| 11 | | 4 | 40 | |
| 12 | | 8 | | |
| 13 | Mantissa ($10^1$) digit BCD | 1 | 41 | +5V |
| 14 | | 2 | 42 | +5V |
| 15 | | 4 | 43 | +5V |
| 16 | | 8 | 44 | +5V |
| 17 | GND | | 45 | GND |
| 18 | +5V | | 46 | GND |
| 19 | GND | | 47 | +5V |
| 20 | GND | | 48 | Print command signal |
| 21 | GND | | 49 | Print busy signal |
| 22 | +5V | | 50 | GND |
| 23 | GND | | | |
| 24 | GND | | | |
| 25 | GND | | | |

(2) Connection to Pen Recorder Output

The quality of a digital system can be checked over a long period by combining the ME448B with a pen recorder.
This can be used to check the correlation between rainfall and fading and the error rate of a radio PCM system.
The error rate exponent and status data are converted to a 0 to 4.5 V dc in 0.5 V step and output from the ME448B recorder output connector. (See Fig. 4-11.)
Fig. 4-12 shows the ME448B and pen recorder connections. Perform measurement as follows:

| Step | Procedure |
|---|---|
| 1 | Connect the receiving unit RECORDER OUTPUT (+) and (-) connectors (36) to the pen recorder input connector with the connection cable. |
| 2 | Set the COUNT TIME switch (29) to MANUAL and set the equipment for error pulse measurement. Since the recorder output is approximately 0 volts at this time, it matches the MIN point of the pen recorder. Next, set the COUNT TIME switch (29) to $10^9$ bits, set the equipment for error rate measurement, then disconnect the input signal and open the input. Since the pen recorder output is approximately 4.5 V at this time, it matches the pen recorder MAX point. |
| 3 | Set the pen recorder time base (paper speed). This completes operation. The pen recorder chart is graduated in 10 steps from MIN to MAX and the error rate and state are represented in 10 steps as shown in Fig. 4-11. |

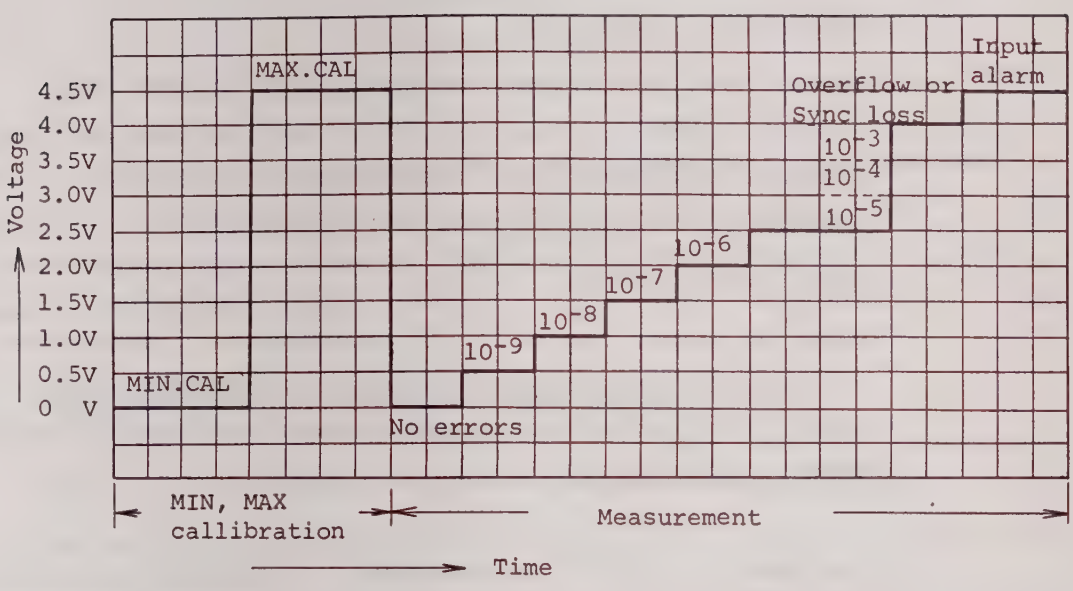


Fig. 4-11 Pen Recorder Output Example (COUNT TIME $10^9$ bits)

NOTE: When recording the error rate of $>10^{-5}$, set the COUNT TIME switch (29) to $10^8$ or $10^7$.

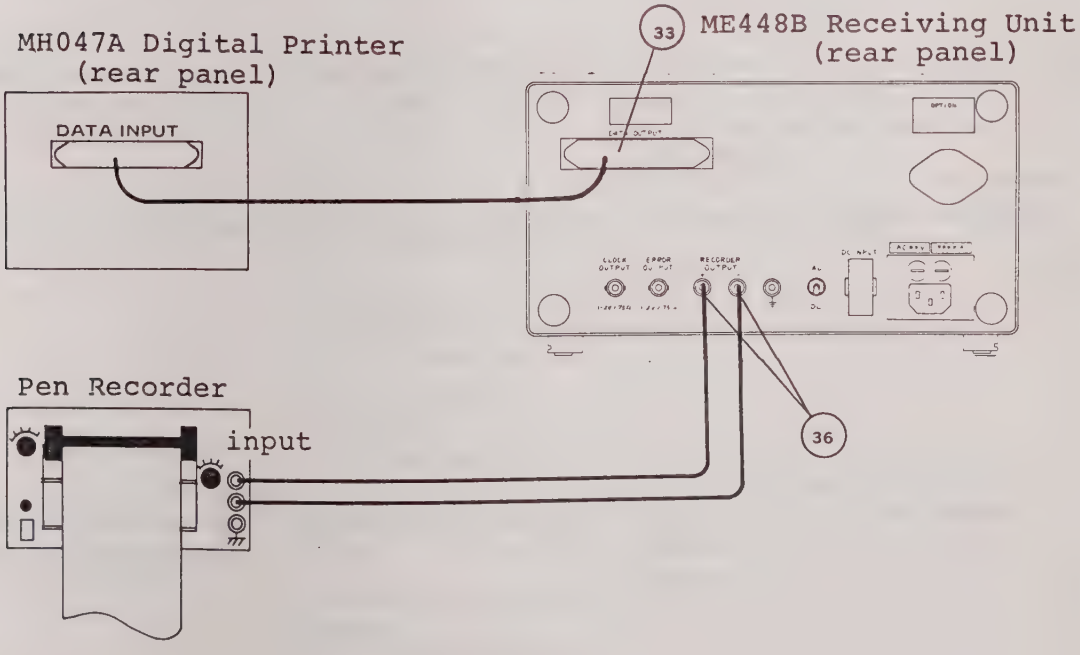


Fig. 4-12 ME448B Receiving Unit and Peripheral Device Connections

NOTE: Explanation of SYNC LOSS (red LED)

- o SYNC LOSS lights up

  When 1,024 bit errors occur within 10,240 bits (clock signal) after synchronization, the sending and receiving pattern are considered out of synchronization and SYNC LOSS light up.

- o SYNC LOSS goes off

  When no error occur in 30 consecutive clock bits after out of synchronization, the sending and receiving pattern are considered synchronization and SYNC LOSS goes off.

# SECTION 5

# PERFORMANCE CHECK

When an acceptance inspection for this equipment is required, perform the performance check according to Section 5.2. The specifications listed in Table 2-2 are to be used as performance check standards.

## 5.1 TEST EQUIPMENT REQUIRED FOR PERFORMANCE CHECK

Table 5-1 Equipment Required for Performance Check

| Recommended equipment | Performance | Required for |
|---|---|---|
| MF57A frequency counter (Anritsu) | Frequency range: 10 Hz to 600 MHz | Sending unit internal oscillator frequency accuracy. |
| MG545A synthesizer (Anritsu) | Frequency range: 10 kHz to 500 MHz | Operating bit rate (unipolar and bipolar signals) with sending and receiving units directly connected. |
| MG442A synthesized level generator (Anritsu) | Frequency range: 10 Hz to 20 MHz | Operating bit rate (unipolar signal) with sending and receiving units directly connected. |
| HP 1275A oscilloscope | Operating frequency: DC to 275 MHz<br>Input sensitivity: 10 mV/cm to 5 V/cm, dual trace<br>Input impedance: HIGH or 50Ω switchable | Sending unit output waveform |
| MN510D variable resistance attenuator (Anritsu) | Operating frequency: DC to 500 MHz<br>Input/ourput impedances: 75Ω unbalanced<br>Steps: 10 dB x 8<br>1 dB x 10<br>0.1 dB x 10<br>(3 dials) | Receiving unit unbalanced bipolar signal input level range. |

Table 5-1 Equipment Required for Performance Check (Cont)

| Recommended equipment | Performance | Required for |
|---|---|---|
| Variable resistance attenuator | Operating frequency: DC to 10 MHz<br>Input/output impedances: 100Ω balanced<br>Steps: 10 dB x 2<br>1 dB x 10<br>0.1 dB x 10 | Receiving unit balanced bipolar signal input level range. |

## 5.2 PERFORMANCE CHECKS

There are four main performance checks:

(1) Internal oscillator of sending unit frequency accuracy

(2) Operating bit rate when sending and receiving units are directly connected.

(3) Sending unit output waveform

(4) Bipolar signal input level range of receiving unit

Make the measurements at room temperature, allowing at least 10 minutes for warmup.

### 5.2.1 Internal Oscillator Frequency Accuracy of Sending Unit

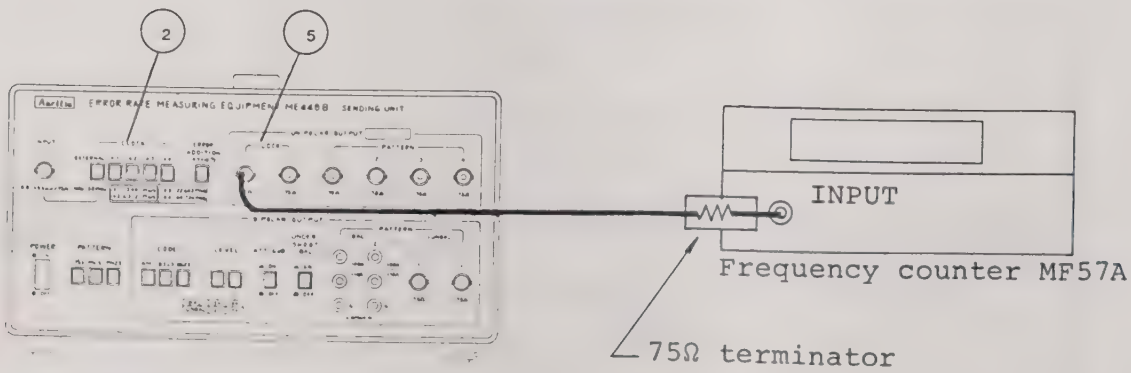


Fig. 5-1 Sending Unit Internal Oscillator Frequency Accuracy Check

| Step | Procedure |
|---|---|

1 Connect a 75Ω terminator to the high impedance input of the frequency counter, and connect the CLOCK output connector (5) to the terminater with the supplied cord.

2 Sequentially set the CLOCK switch (2) to the X1, X2, X3 and X4 positions and verify whether the frequency at each switch position is within the rated values given in Table 2-2.

| CLOCK Switch Position | Measured Frequency | Accuracy |
|---|---|---|
| X1 | | ☐ PPM |
| X2 | | ☐ PPM |
| X3 | | ☐ PPM |
| X4 | | ☐ PPM |

Remarks:

- X3 and X4 are provided when the ME448B is equipped with OPTIONS 11 or 12
- The accuracy is expressed by the equation:

$$\text{Accuracy} = \frac{\text{Measured frequency} - \text{Nominal frequency}}{\text{Nominal frequency}}$$

Nominal frequency is the value indicated below CLOCK switch (2).

5.2.2 Operating Bit Rate Range Check

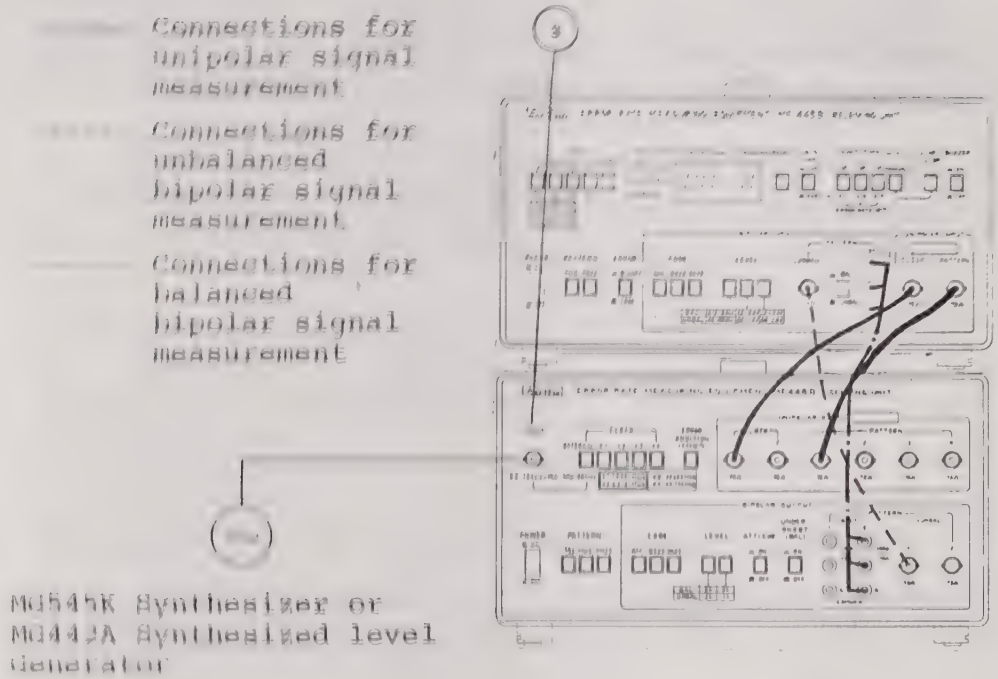


Fig. 5-2 Operating Bit Rate Range Check

| Step | Procedure |
|---|---|
| 1 | Connect the output connector of the synthesizer or synthesized level generator to the external clock input connector (3) of the sending unit with the supplied cord. Set the synthesizer level to +1 dBm to +7 dBm (75Ω). |
| 2 | Connect the sending unit output connector to the receiving unit input connector using the cable supplied with the unit.<br>To measure a unipolar signal, make the connections indicated by the solid lines. To measure unbalanced bipolar signals, make the connections indicated by the dotted lines, and to measure balanced bipolar signals make the connections indicated by the chained lines. |

| Step | Procedure |
|---|---|
| 3 | Test the operating by generating the frequency corresponding to the rated bit rate (1 kHz at 1 Kbit/s, 50 MHz at 50 Mbit/s) with a synthesizer or synthesized level generator. Refer to Section 4.5 for a description of the test procedure. |

5.2.3 Sending Unit Output Waveform Check

(1) Unipolar Output (ECL level) Check

Fig. 5-3 shows the connections.

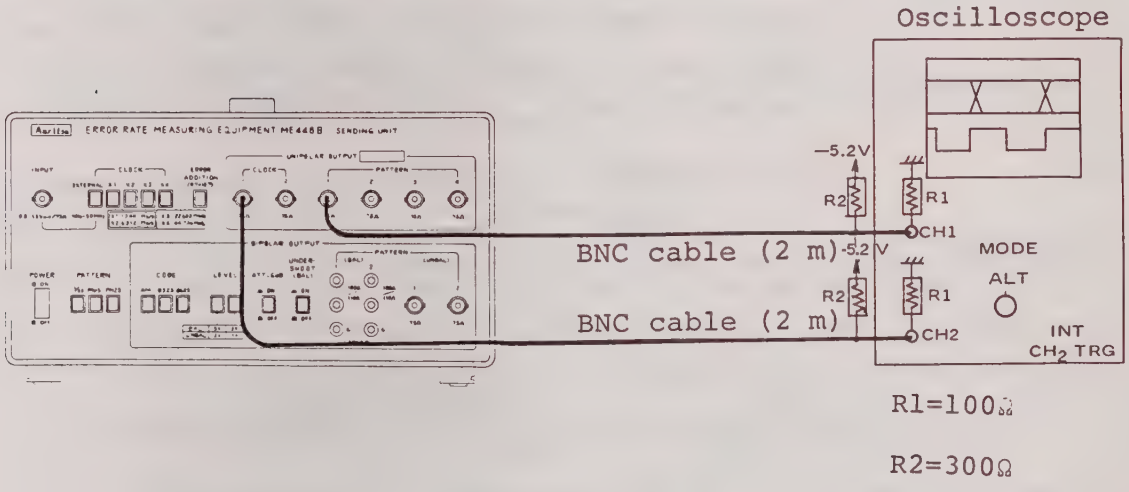


Fig. 5-3 Unipolar Output (ECL level) Check

| Step | Procedure |
|---|---|
| 1 | Connect the sending unit to the osicllloscope as shown in Fig. 5-3. Set the oscilloscope input to DC coupling, high input impedance. |
| 2 | Set the oscilloscope synchronization to INTERNAL CH2 TRIGGER. Set MODE to ALT (alternate). |
| 3 | Display a unipolar eye pattern (CH1) and clock signal (CH2) on the oscilloscope and note the level and rise fall time of the pattern. |
| | Note: Because the ECL output of the ME448B is in the circuit shown in Fig. 5-4, when the output is terminated by 100Ω to ground and 300Ω to -5.2 V, the levels are<br>H level: -1.1 ±0.1 V<br>L level: -1.52 ±0.1 V |

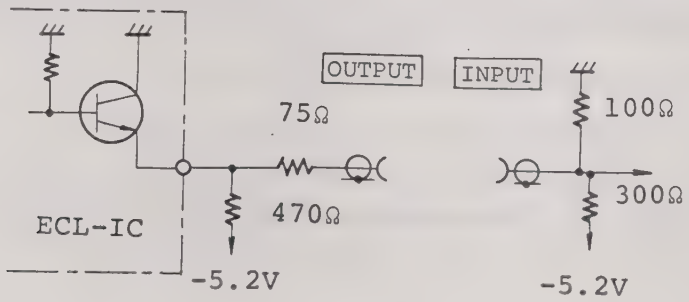


Fig. 5-4 Unipolar (ECL) Output Circuit and Input Circuit

(2) Unipolar (0/+2.4 V, 0/+3 V) and Bipolar (Unbalanced) Output Check

Fig. 5-5 shows the connections.

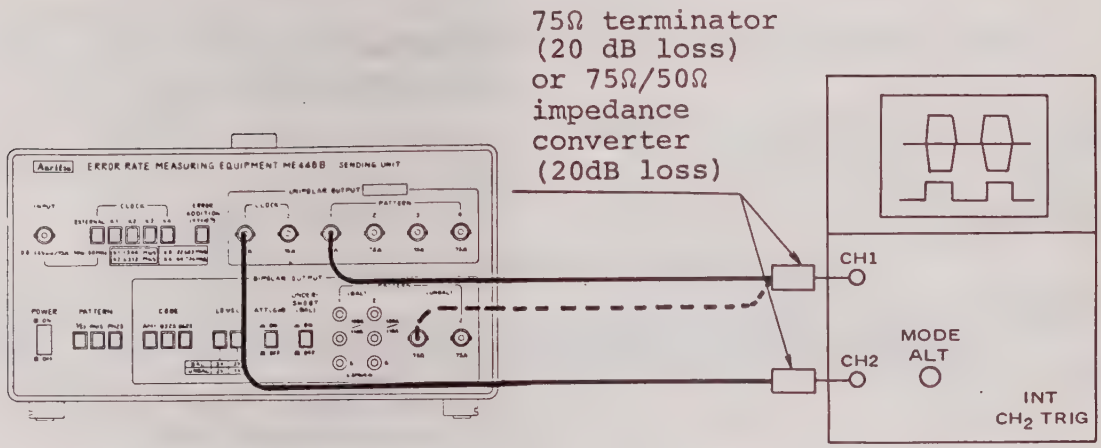


Fig. 5-5 Unipolar Output (0/+2.4 V, 0/+3 V) and Bipolar (UNBAL) Output Check

| Step | Procedure |
|---|---|
| 1 | Use the connections indicated by the solid lines in Fig. 5-5 for unipolar output (0/+2.4 V, 0/+3 V) and the connections indicated by the dotted lines for unbalanced bipolar output. Use the cord supplied with the unit. |
| 2 | When using a 75Ω terminator (20 dB loss), set the oscilloscope to DC coupling and high input impedance.<br>When using 75Ω/50Ω impedance converter (20 dB loss), use the oscilloscope input for 50Ω DC coupling.<br>Set the oscilloscope synchronization to INTERNAL CH2 TRIGGER.<br>Set MODE to ALT (alternate). |
| 3 | Display the clock signal (CH2) and unipolar or bipolar signal eye pattern (CH1) on the oscilloscope and check the waveforms. |

(3) Balanced Bipolar Signal Output Waveform Check

Fig. 5-6 shows the connections.

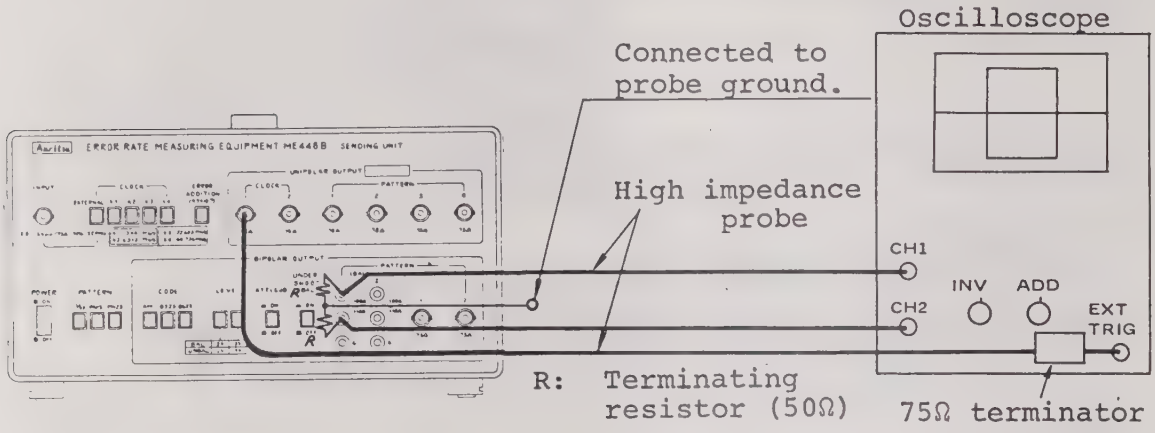


Fig. 5-6 Balanced Bipolar Signal Output Waveform Check

| Step | Procedure |
|---|---|
| 1 | Fig. 5-6 shows the connections. |
| 2 | Set the oscilloscope input to DC coupling, high input impedance.<br>Set the synchronization to EXTERNAL TRIGGER.<br>Set the polarity to NORMAL for CH1 and INVERSE for CH2.<br>Set MODE to ADD.<br>Set CH1 and CH2 to the same voltage range. |
| 3 | Display a bipolar eye pattern on the oscilloscope and check the waveform. The 1,544 Kbit/s bipolar signal output waveform can be quickly checked with a CCITT G703 pulse mask (Fig. 5-7). |

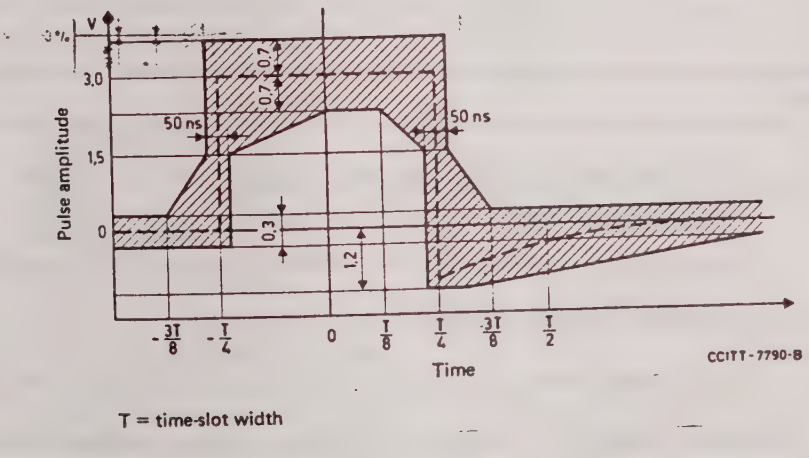


Fig. 5-7 Mask of the Pulse at 1,544 Kbit/s Interface

## 5.2.4 Receiving Unit Bipolar Signal Input Level Range Check

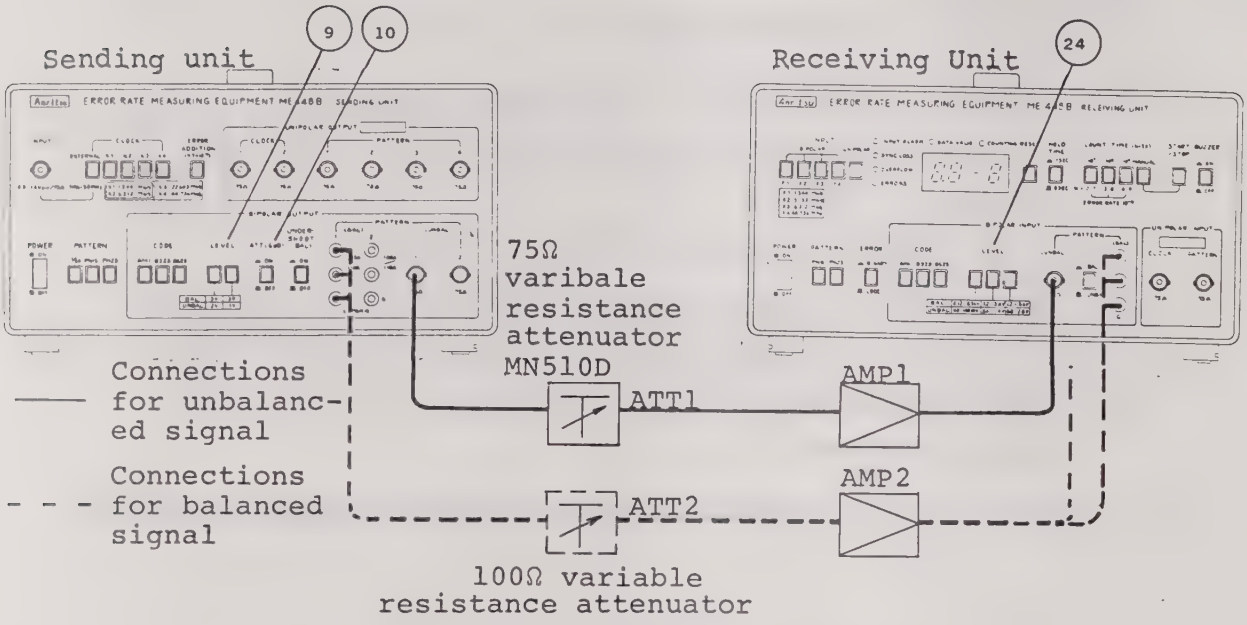


Fig. 5-8 Bipolar Signal Input Level Range Check

| Step | Procedure |
|---|---|

1 To check an unbalanced input level, make the connections indicated by the solid line in Fig. 5-8. To check a balanced input level range, make the connections indicated by the dotted line.

2 Set the sending unit LEVEL switch (9) to

| | |
|---|---|
| BAL | 3 V |
| UNBAL | 2 V |

set the ATT switch (10) to OFF, and set the bipolar signal output level to maximum. Other panel operations are the same as those described in Section 4.5.2.

3 Using a resistance attenuator and an amplifier to set the input signals to each range of the receiving unit bipolar signal input LEVEL switch (24), check that no binary errors or code violation errors are generated at

any level range. Also check that the binary error rate is $9.7 \times 10^{-4}$ when the equipment is placed into error insertion status with the sending unit ERROR ADDITION switch (4).

(a) Unbalanced signal

Table 5-2 shows the ATT1 and AMP1 values for each input range.

Table 5-2 Unbalanced Signal Input Level Range and ATT1 and AMP1 Values

| Input level range | ATT1 (Loss) | AMP1 (Gain) |
|---|---|---|
| 2.0 to 2.8 Vo-p | 2.9 to 0 dB | 2.9 dB |
| 0.8 to 2.0 Vo-p | 8.0 to 0 dB | 0 dB |
| 0.4 to 1.4 Vo-p | 14.0 to 3.1 dB | |
| 40 to 140 mVo-p* | 34.0 to 23.1 dB | |

(b) Balanced signal

Table 5-3 shows the ATT2 and AMP2 values for each input range.

Table 5-3 Balanced Signal Input Level Range and ATT2 and AMP2 Values

| Input level range | ATT2 (Loss) | AMP2 (Gain) |
|---|---|---|
| 3.0 to 3.6 Vo-p | 2.0 to 0 dB | 2.0 dB |
| 1.2 to 3.0 Vo-p | 8.0 to 0 dB | 0 dB |
| 0.12 to 0.36 Vo-p* | 28.0 to 18.4 dB | |

* This measurement range is provided only when OPTION 40 is specified.

# SECTION 6

# REPAIR

If a malfunction occurs during measurement or the results of the performance check in SECTION 5 are unsatisfactory, use the trouble shooting procedures given in Section 6.1.

## 6.1 TROUBLESHOOTING

Troubleshooting procedures are indicated by a flow chart method. Before repairing you should find roughly that the trouble is the sending unit or receiving by using Figs. 6-1 and 6-2. After determining the faulty unit roughly, use the detailed troubleshooting chart described about a individual section to locate and repair the malfunction. The following page circuit diagrams and component location figures are very available to check the faulty points and to find the faulty components.

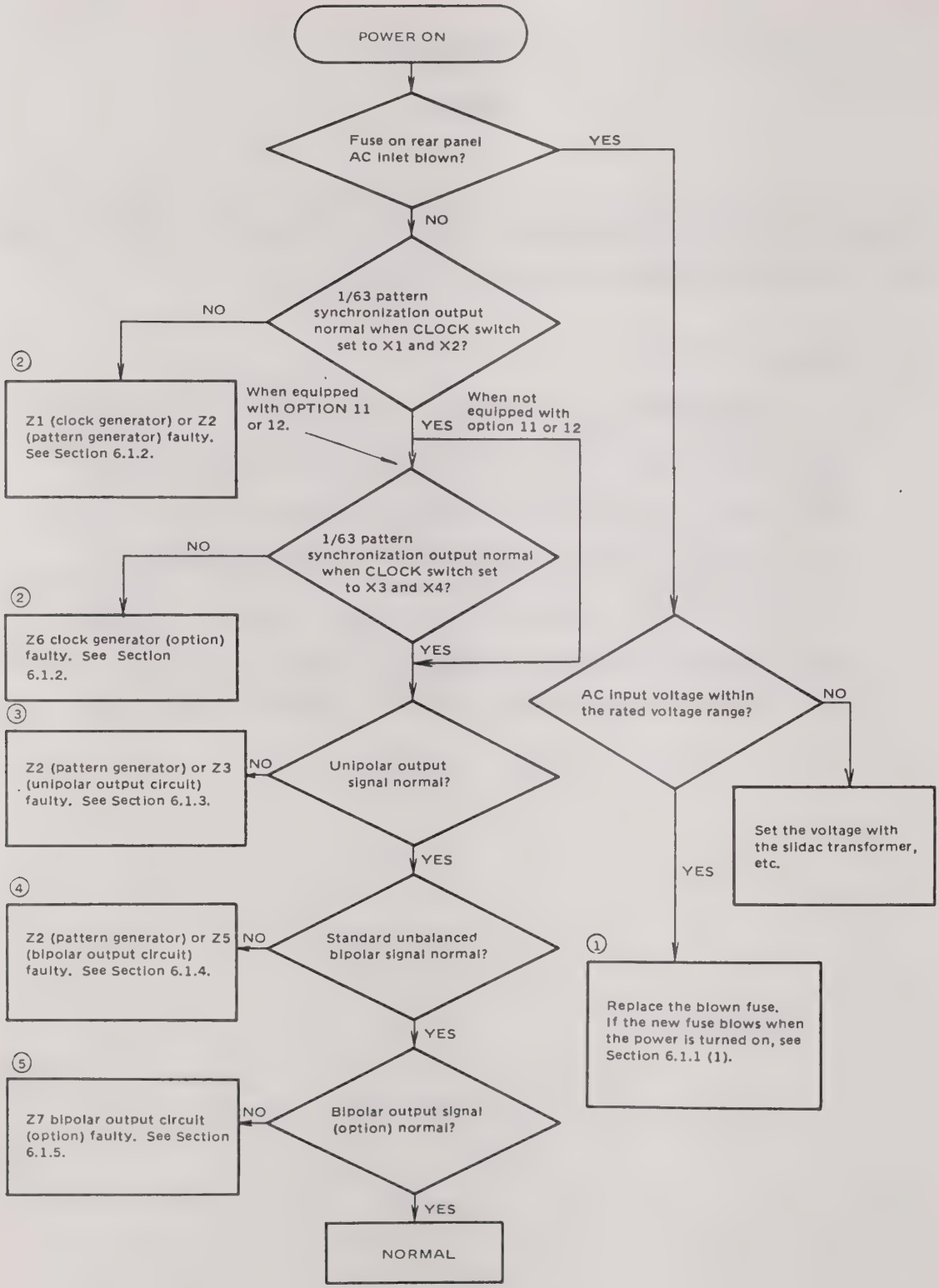


Fig. 6-1 Sending Unit Troubleshooting

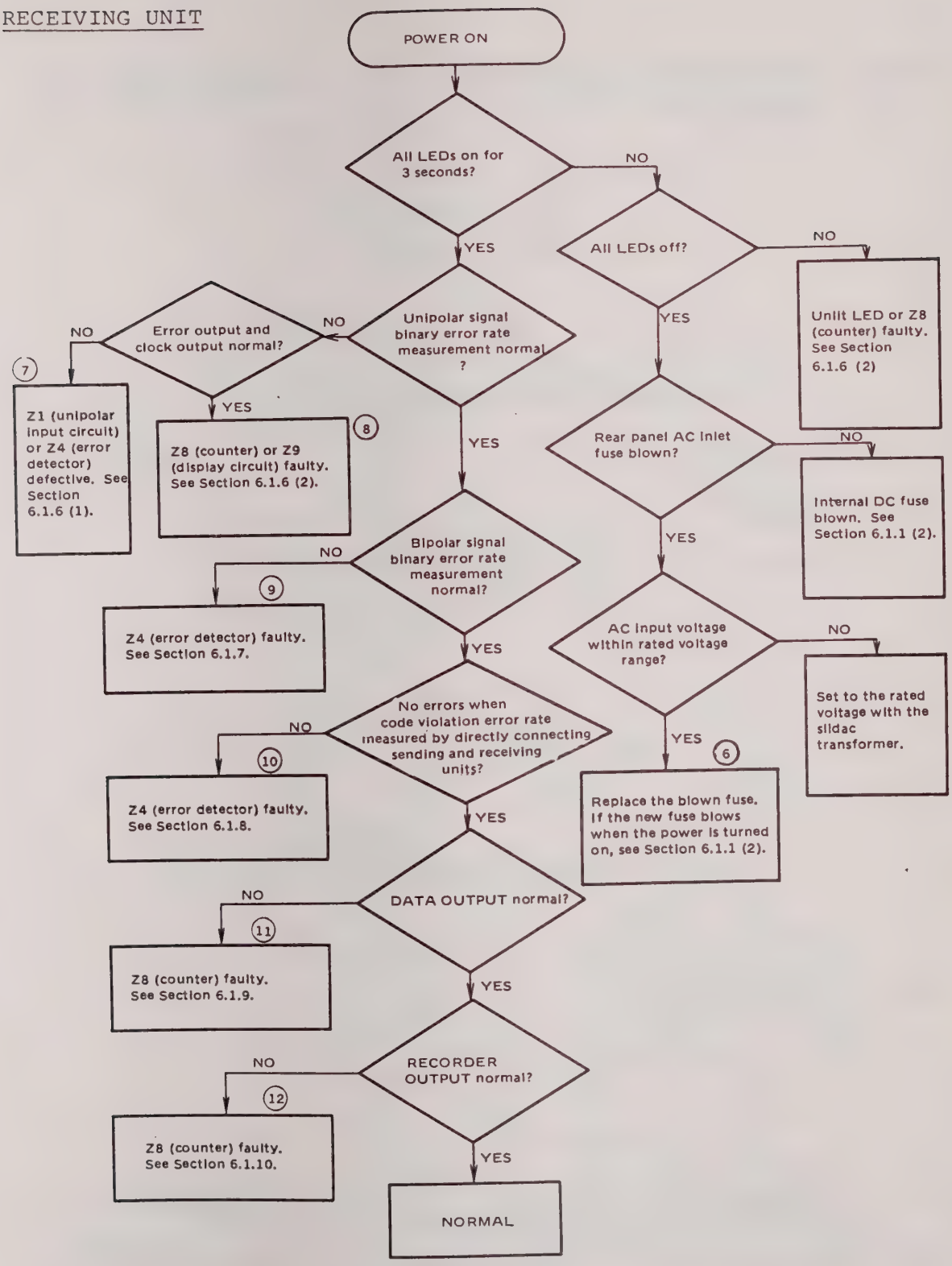


Fig. 6-2 Receiving Unit Troubleshooting

## 6.1.1 Power Supply Circuit Repair

### (1) Sending Unit

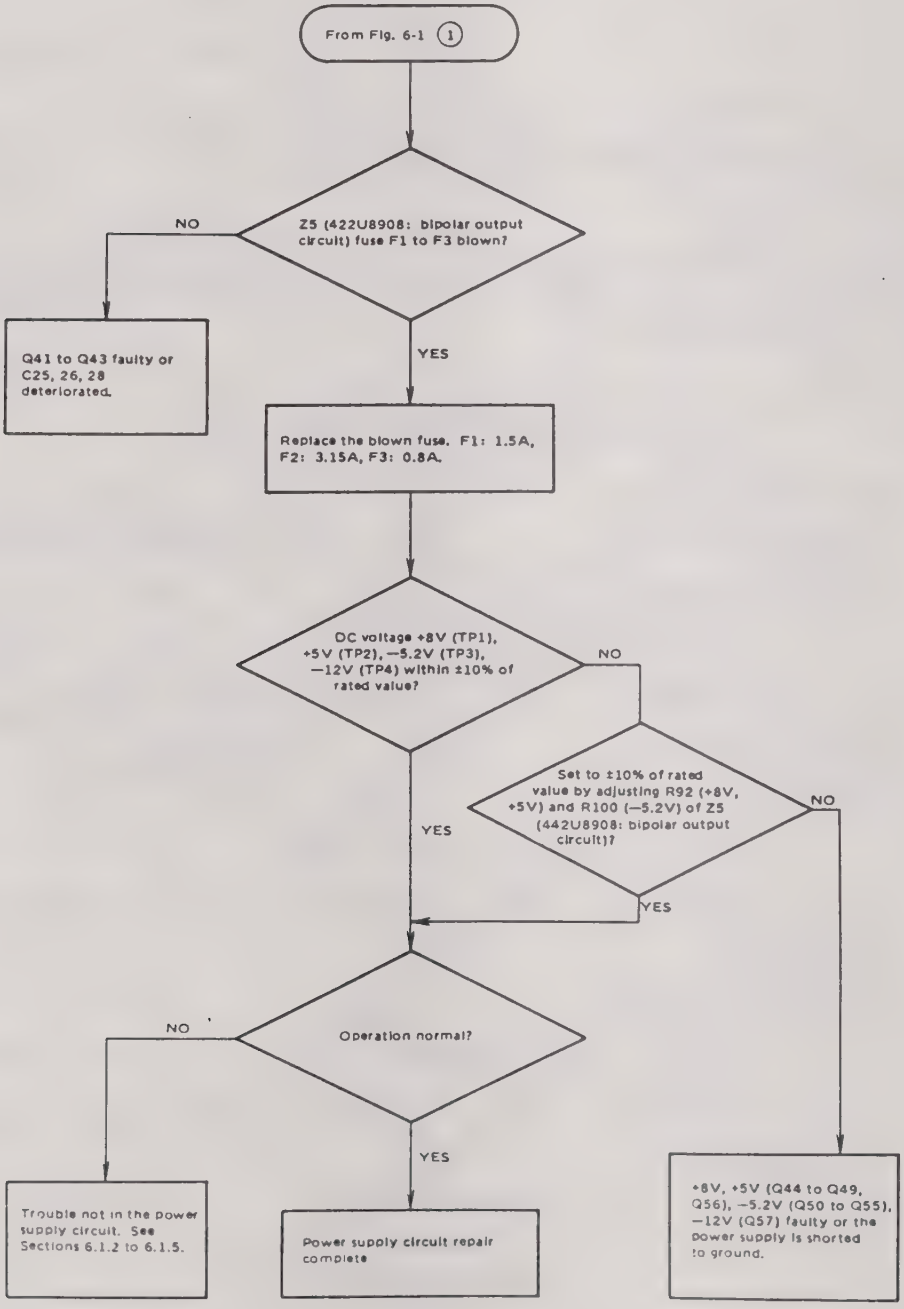


Fig. 6-3 Sending Unit Power Supply Circuit Repair

(2) Receiving Unit

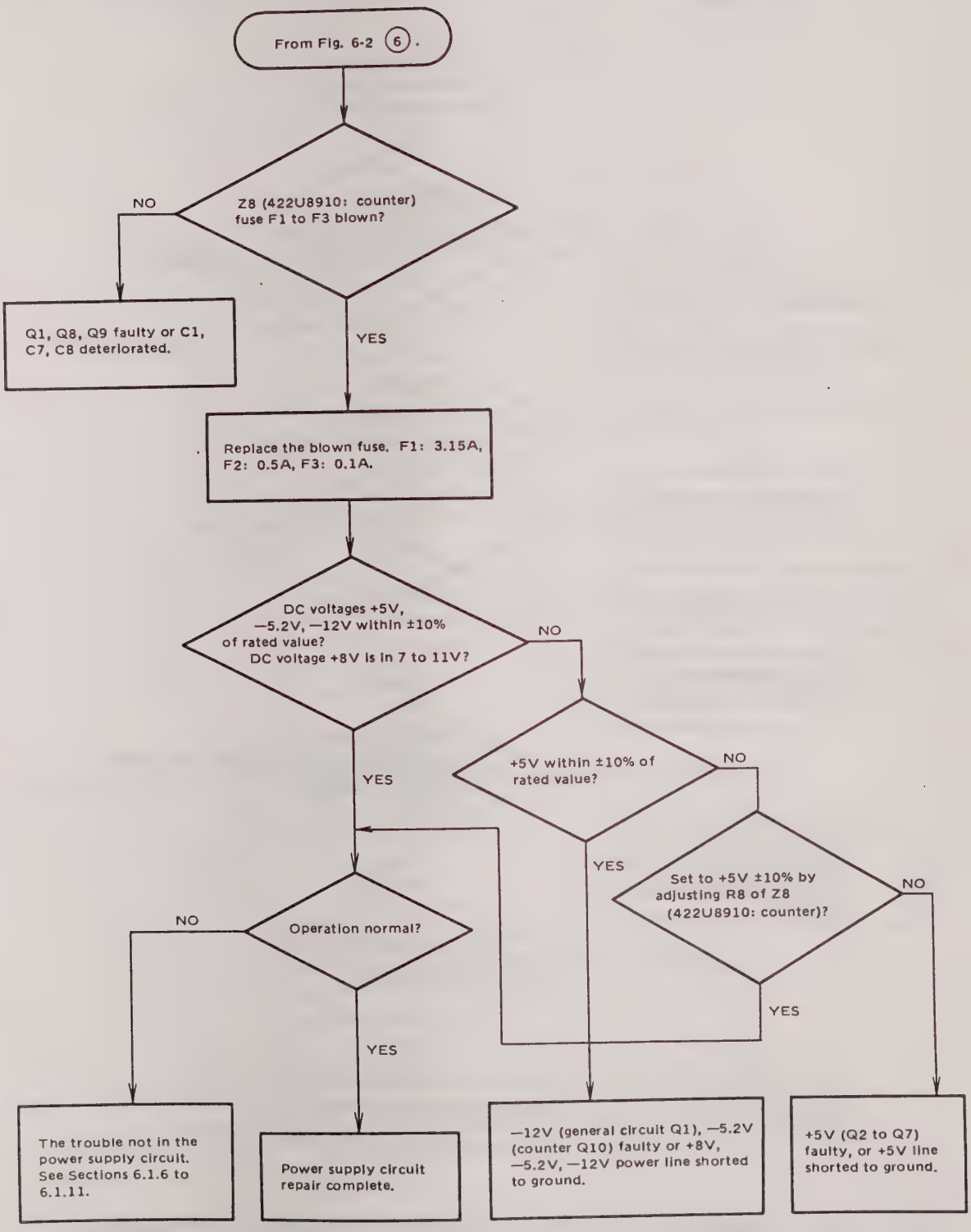


Fig. 6-4 Receiving Unit Power Supply Repair

## 6.1.2 Sending Unit: Clock Generator and Pattern Generator (1/63 or pseudo-random pattern generator) trouble-shooting

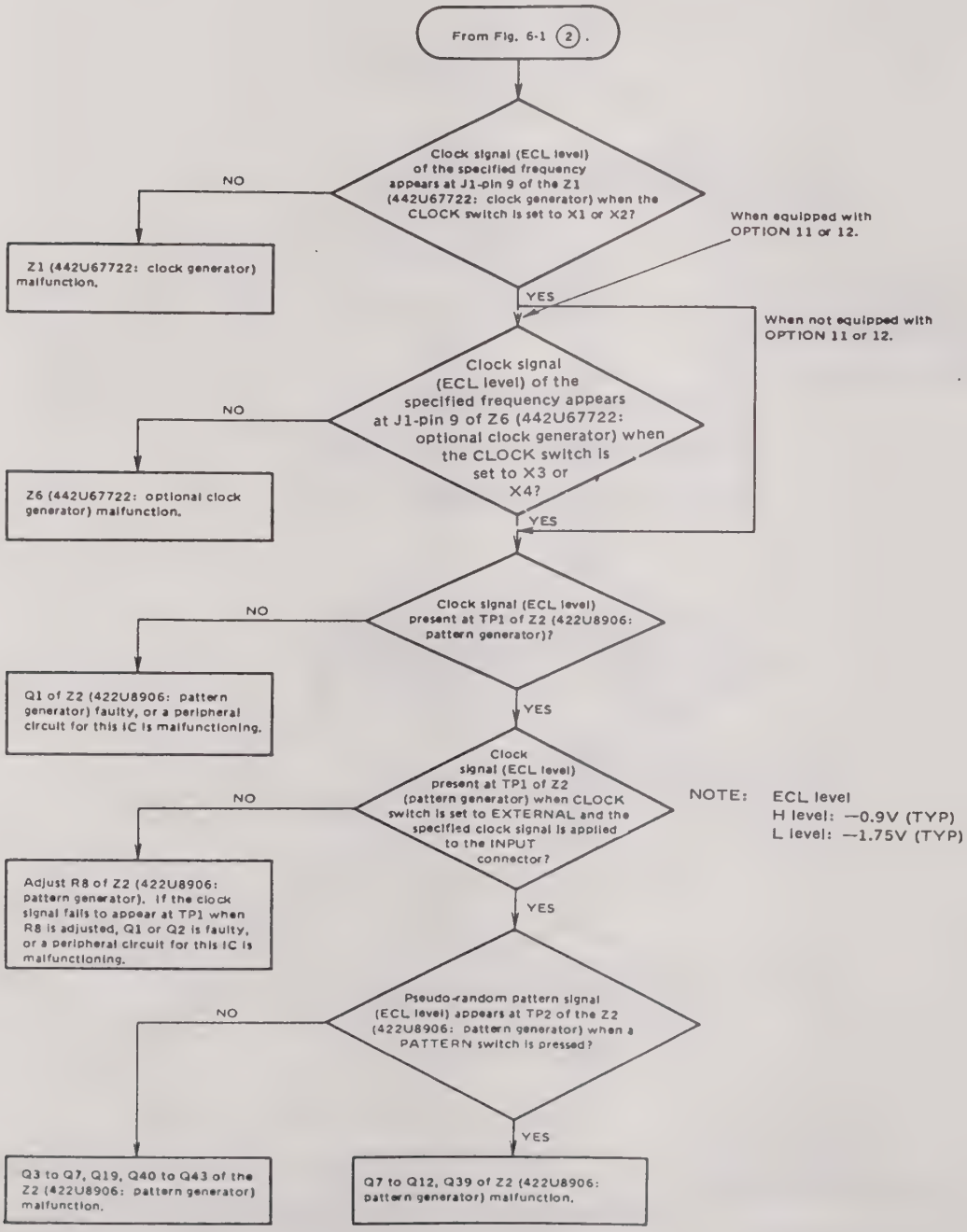


Fig. 6-5 Sending Unit Clock Generator and Pattern Generator (1/63 or psuedo random pattern generator) Troubleshooting

6.1.3 Sending Unit: Unipolar Output Circuit Troubleshooting

(1) ECL Output (standard)

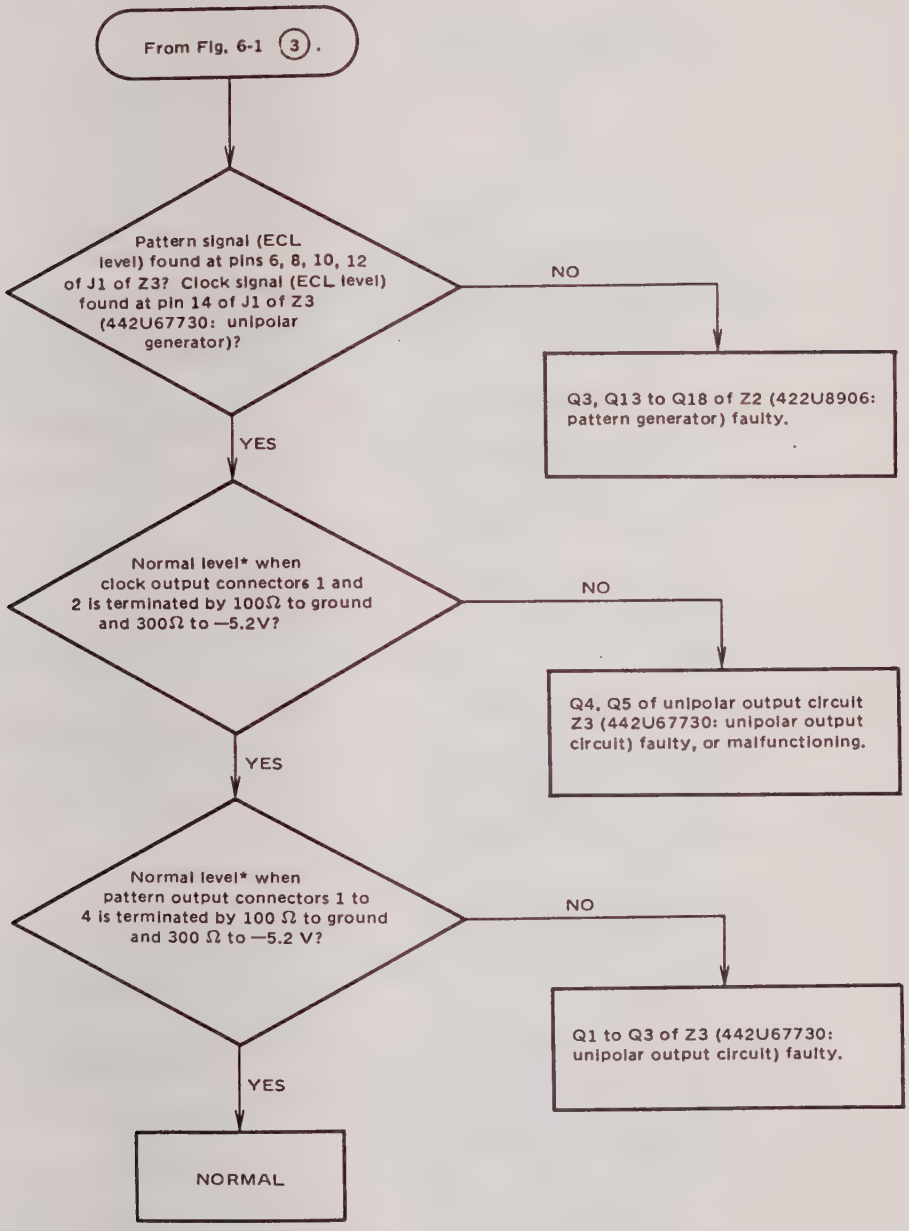


* Since the ECL output is terminated by 100 Ω to ground and 300 Ω to -5.2 V as shown in Fig. 5.4, the output levels are -1.1 ±0.1 V -1.52 V ±0.1 V respectively apart from standard ECL level.

Fig. 6-6 Unipolar Output Circuit (ECL output) Troubleshooting

(2) 0/+2.4V Output (Option 31)

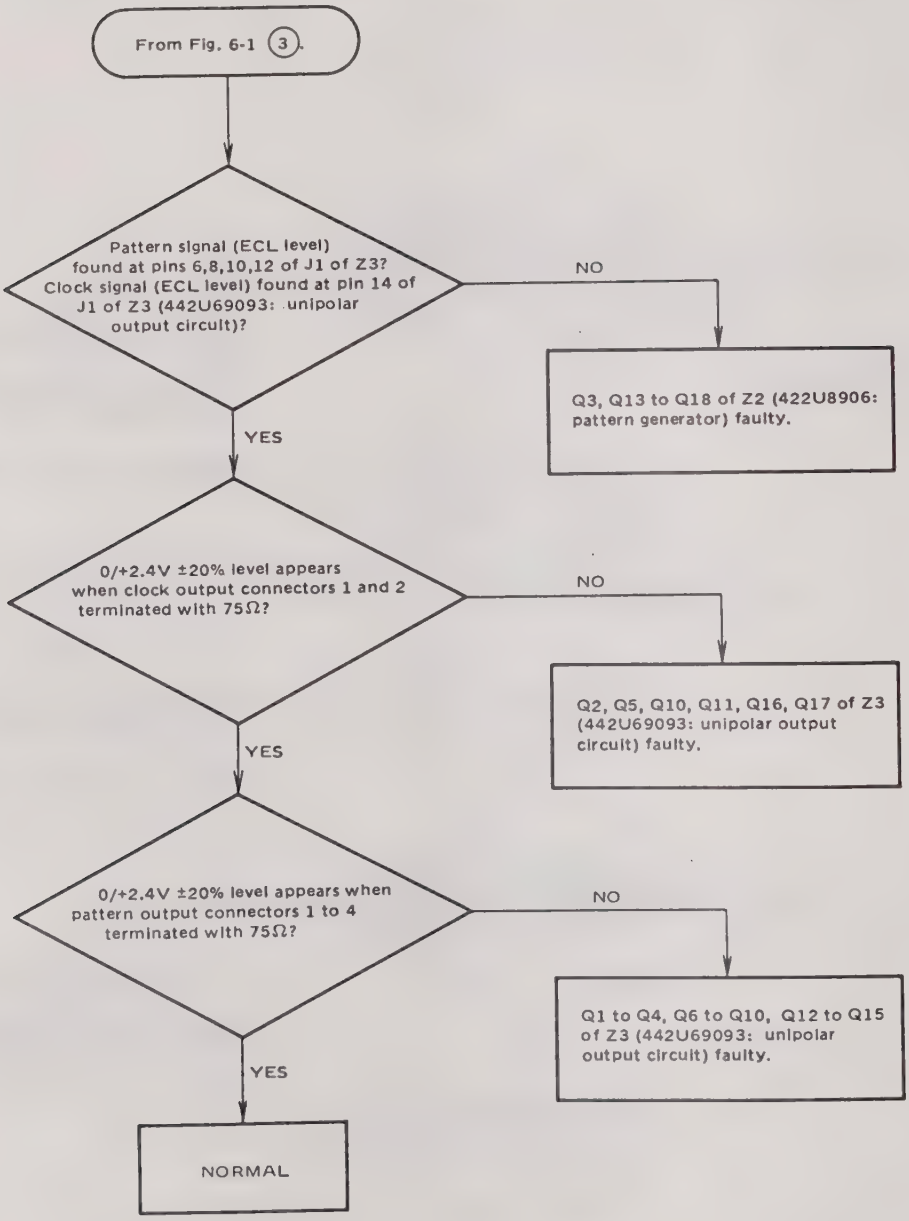


Fig. 6-7 0/+2.4 V Output (Option 31) Troubleshooting

(3) 0/+3 V Output (Option 32)

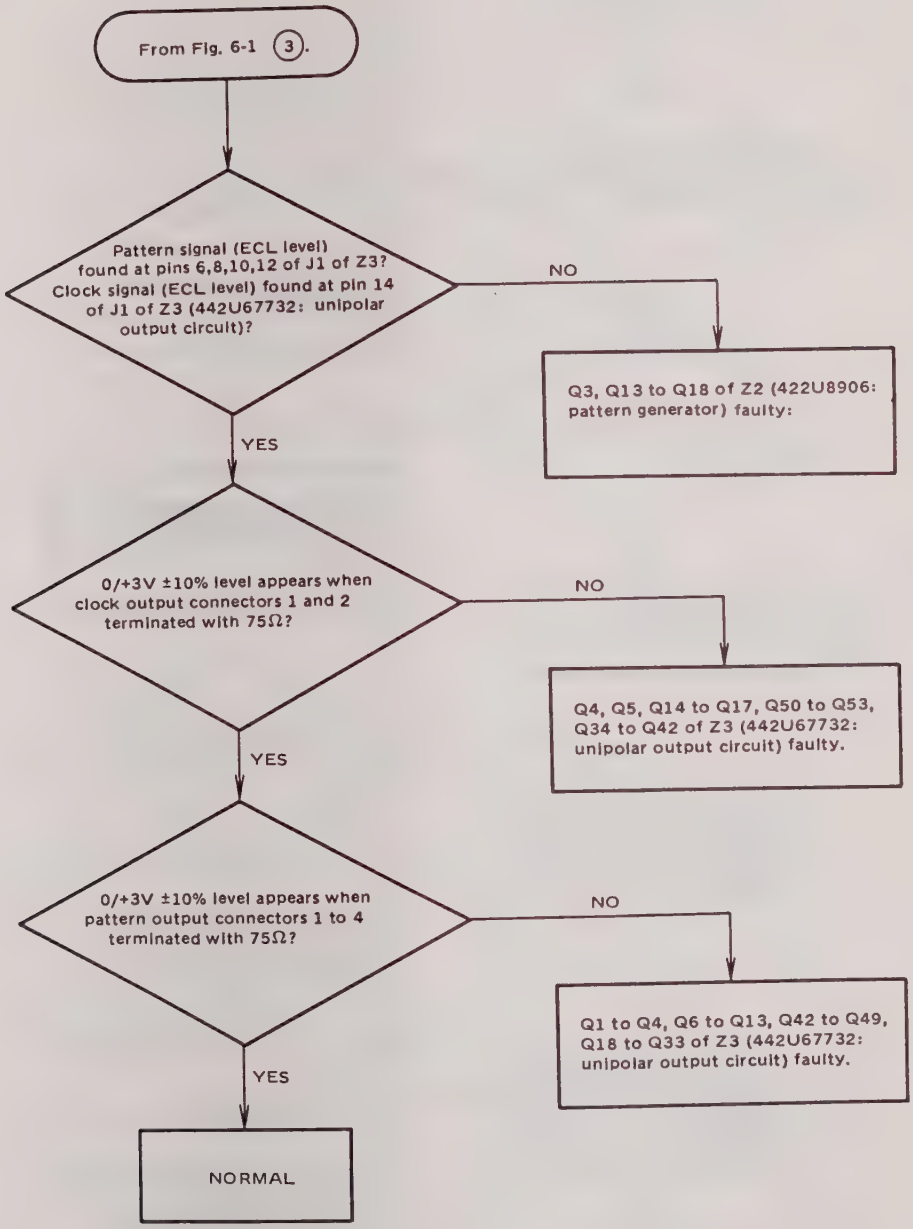


Fig. 6-8 0/+3 V Output (Option 32) Circuit Troubleshooting

## 6.1.4 Sending Unit: Unbalanced Bipolar Output (standard) Circuit Repair

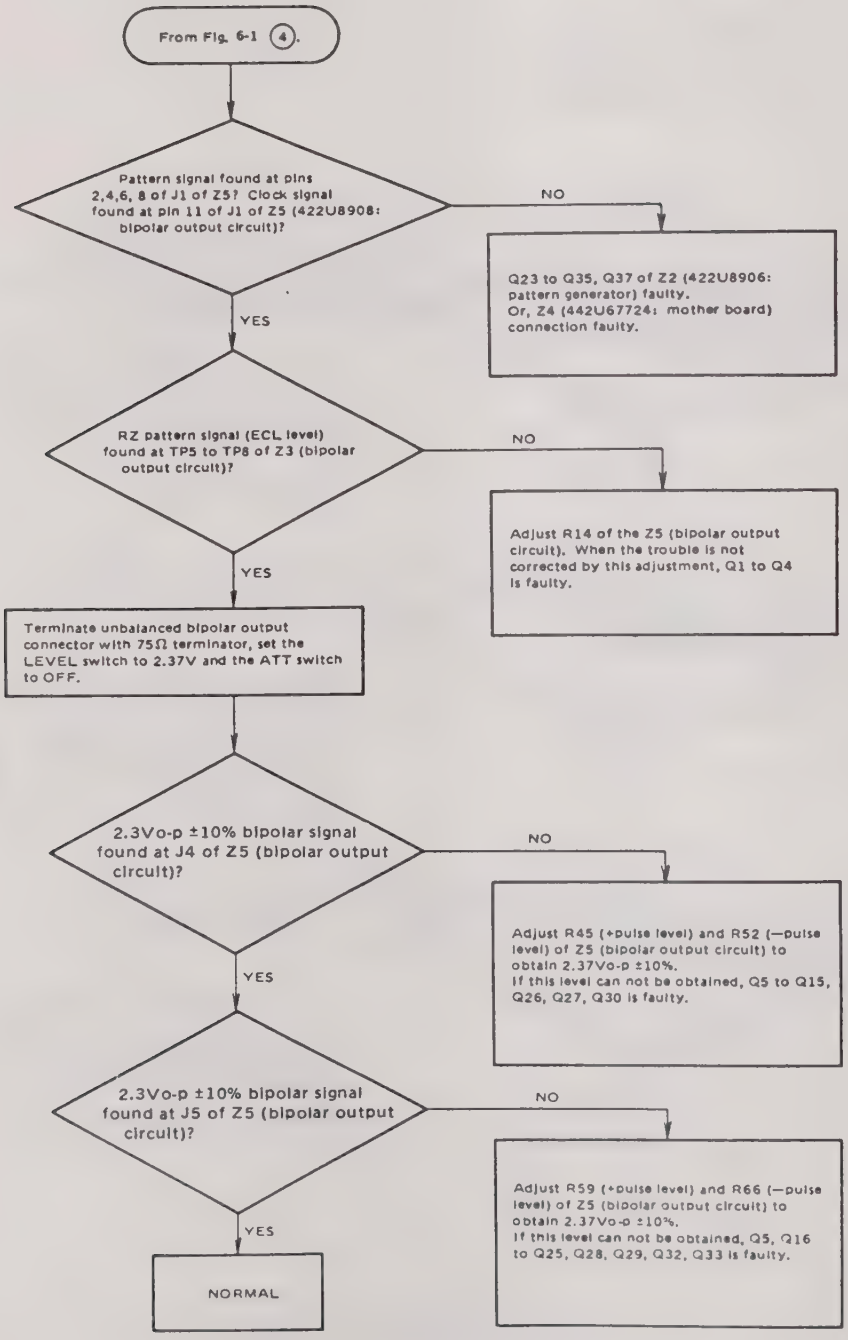


Fig. 6-9 Bipolar Unbalanced Output Circuit (standard) Troubleshooting

6.1.5 Sending Unit: Bipolar Output (Option) Circuit Repair

(1) Unbalanced Output (Option 21)

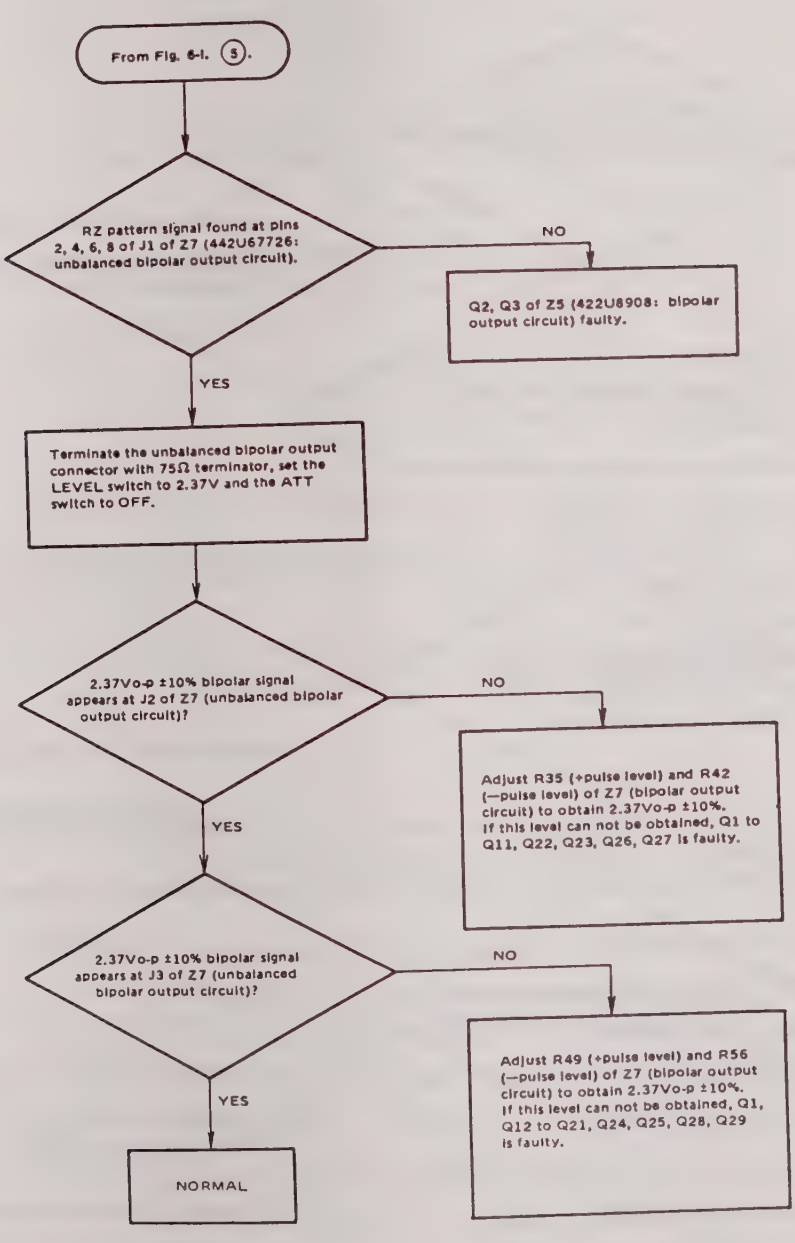


Fig. 6-10 Bipolar Output Circuit (Unbalanced Output, Option 21) Troubleshooting

(2) Balanced Output (Option 22)

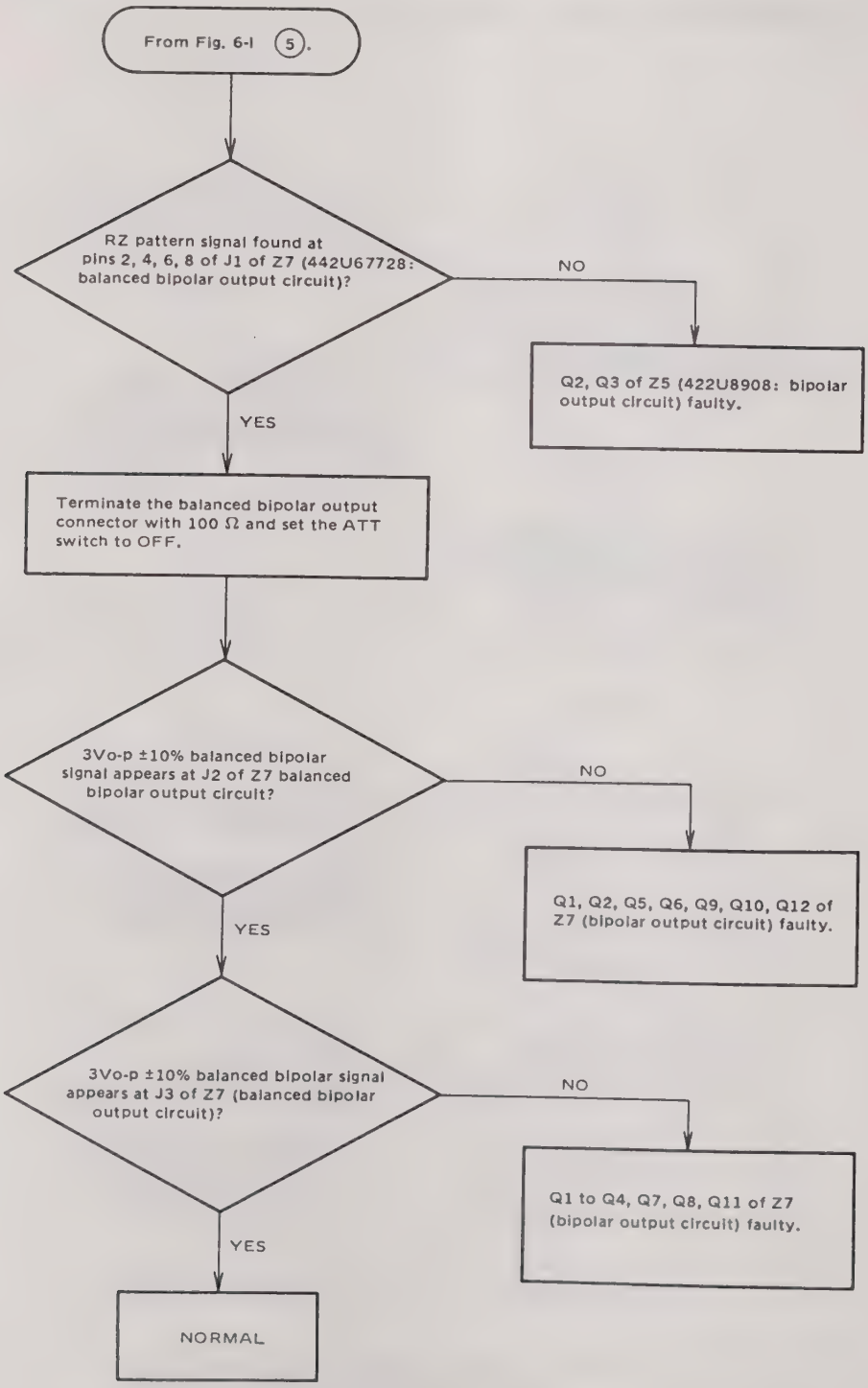


Fig. 6-11 Bipolar Output Circuit (Balanced Output, Option 22) Troubleshooting

6.1.6 Binary Error Rate Measurement Failure with Unipolar Signal

(1) Error Output, Clock Output Abnormal

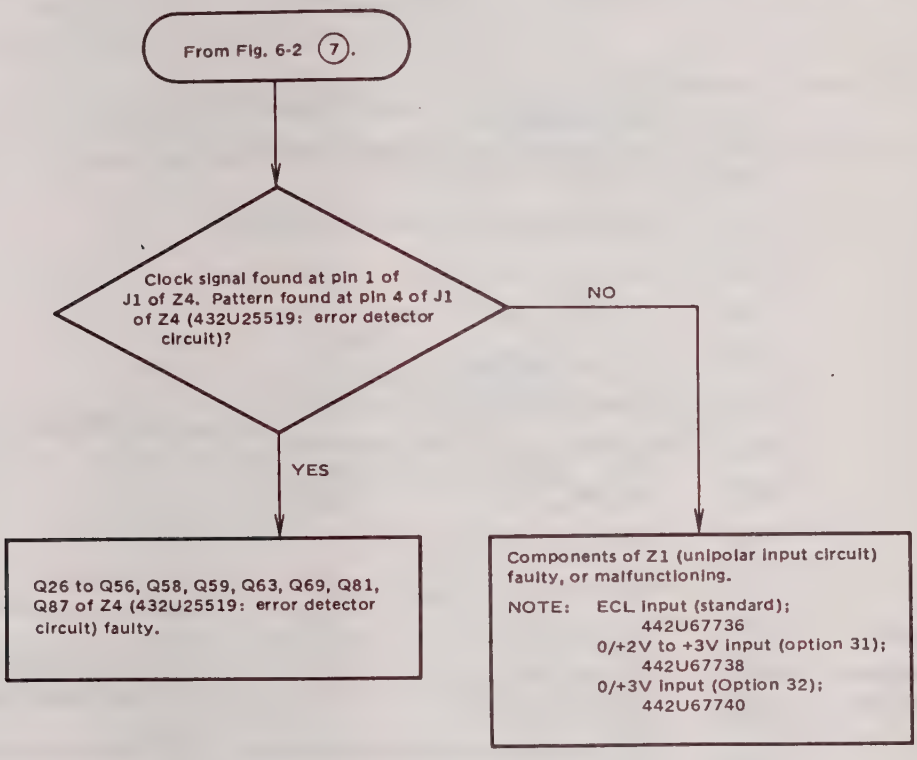


Fig. 6-12 Binary Error Rate Measurement Failure with Receiving Unit Unipolar Signal (Error Output, Clock Output Abnormal)

Remarks: Directly connect the sending unit and receiving unit and check whether the error pulse output is normal or not by pressing the ERROR ADDITION switch. If normal, the error output is about 0 V when the ERROR ADDITION switch is not pressed. 1 to 2 V positive pulse at a rate of about 1 bit per 1024 clock bits should appear when the ERROR ADDITION switch is pressed.

(2) Error Output, Clock Output Normal

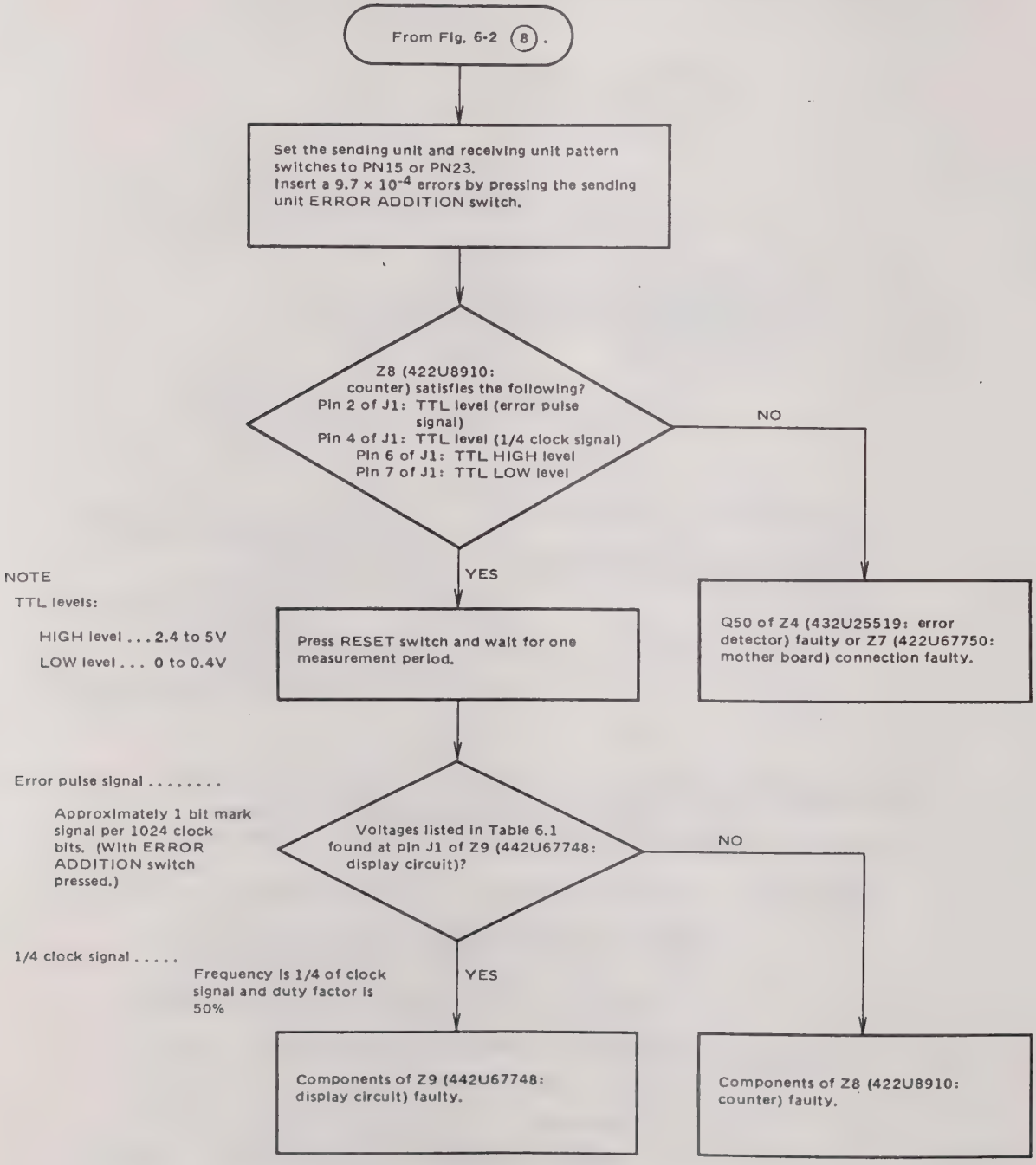


Fig. 6-13 Binary Error Rate Measurement Unsatisfactory with Unipolar Signal (Error Output,Clock Output Normal)

Table 6-1. Voltage of J1 on Z9

Z9 (442U67748: Display circuit) J1 pin output voltage (with $9.7 \times 10^{-4}$ errors inserted by pressing sending unit ERROR ADDITION switch)

| J1 Pin No. | Output Voltage |
|---|---|
| 1 | TTL level LOW |
| 2 | TTL level LOW |
| 3 | TTL level HIGH |
| 4 | TTL level LOW |
| 5 | TTL level HIGH |
| 6 | TTL level HIGH |
| 7 | TTL level HIGH |
| 8 | TTL level HIGH |
| 9 | TTL level LOW |
| 10 | TTL level LOW |
| 11 | TTL level HIGH |
| 12 | TTL level LOW |
| 13 | TTL level LOW |
| 14 | TTL level HIGH |
| 15 | TTL level LOW |
| 16 | TTL level LOW |
| 17 | TTL level HIGH |
| 18 | TTL level HIGH or LOW |
| 19 | LOW only when operated by GP-IB. Otherwise not used. |
| 20 | TTL level LOW |
| 21 | TTL level HIGH |
| 22 | TTL level HIGH |
| 23 | GND |
| 24 | GND |
| 25 | +5 V |
| 26 | Not used |

## 6.1.7 Binary Error Rate Measurement Failure with Bipolar Signal

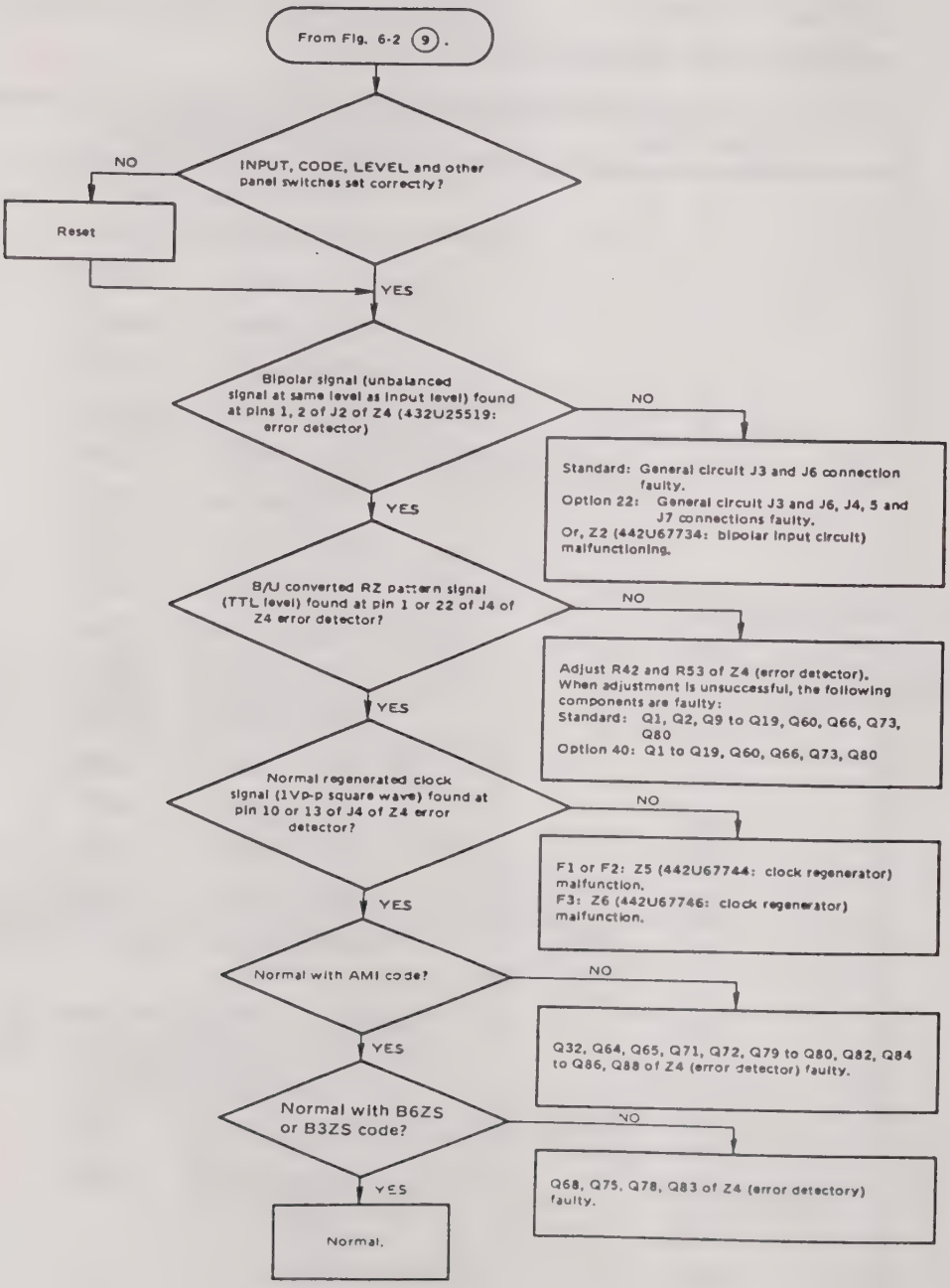


Fig. 6-14 Binary Error Rate Measurement Failure with Bipolar Signal

6.1.8 Code Violation Error Rate Measurement cannot be performed with Bipolar Signal

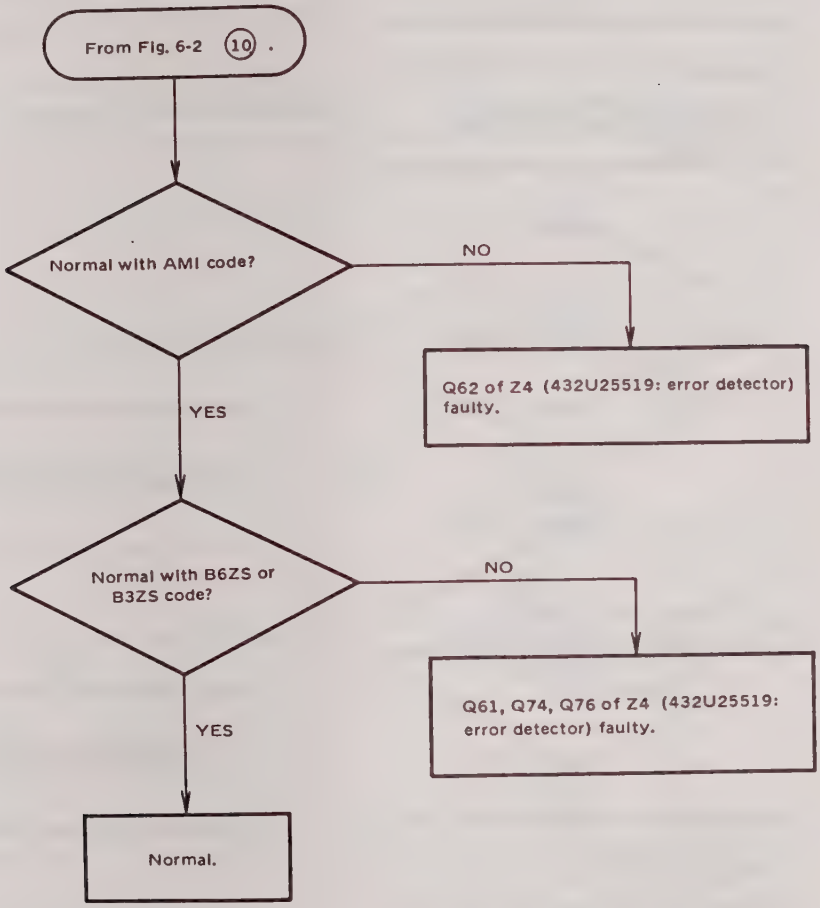


Fig. 6-15 Code Violation Error Rate Measurement Failure with Bipolar Signal

## 6.1.9 DATA OUTPUT Abnormal

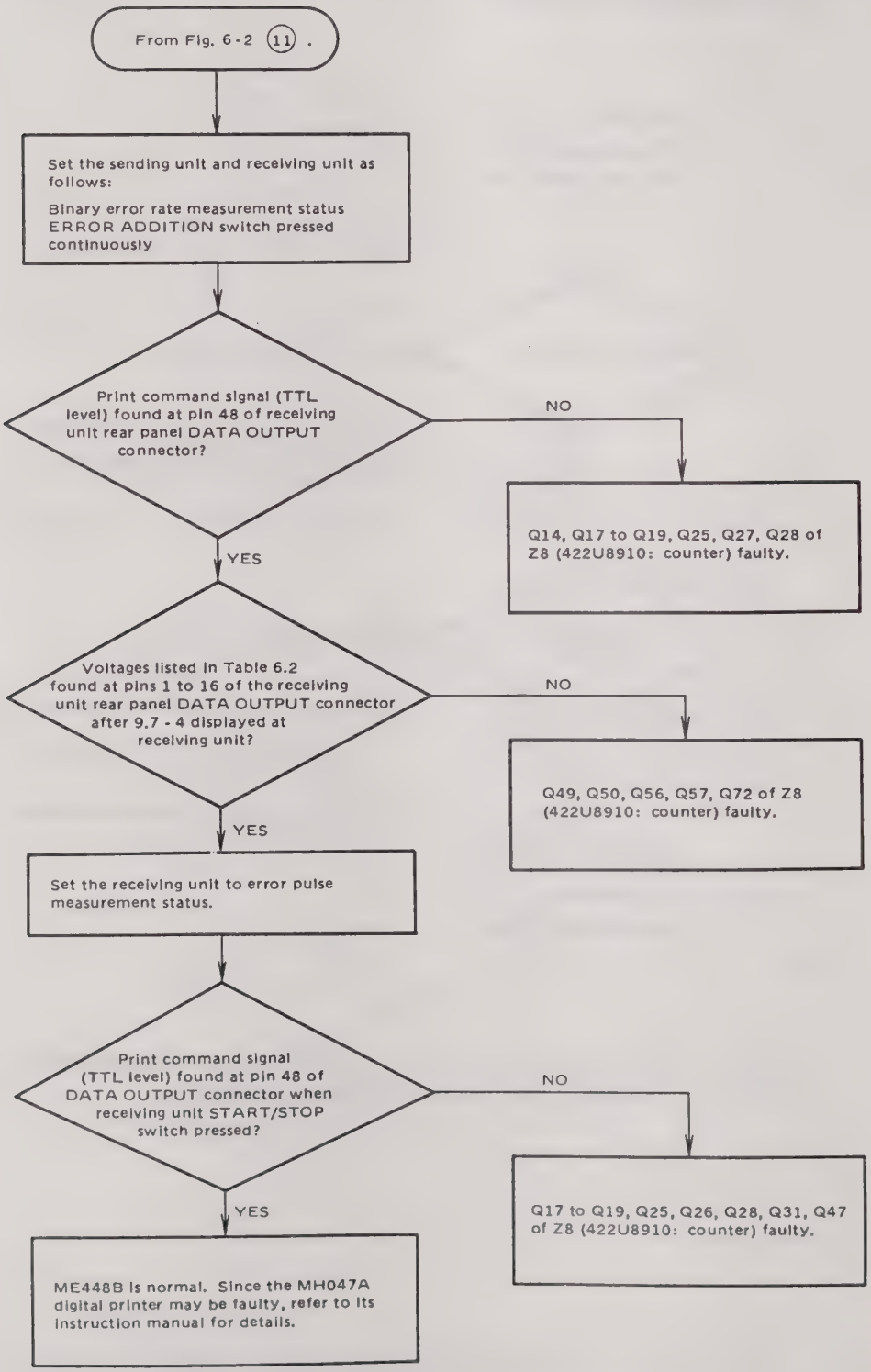


Fig. 6-16 DATA OUTPUT Circuit Troubleshooting

Table 6-2. Data Ouput

Receiving unit DATA OUTPUT connector pins 1 to 16 output voltages (when $9.7 \times 10^{-4}$ errors inserted by pressing sending unit ERROR ADDITION switch)

| DATA OUTPUT Pin No. | Output Voltage |
|---|---|
| 1 | TTL level HIGH |
| 2 | TTL level HIGH |
| 3 | TTL level LOW |
| 4 | TTL level HIGH |
| 5 | TTL level HIGH |
| 6 | GND |
| 7 | TTL level HIGH |
| 8 | GND |
| 9 | TTL level LOW |
| 10 | TTL level LOW |
| 11 | TTL level LOW |
| 12 | TTL level HIGH |
| 13 | TTL level LOW |
| 14 | TTL level HIGH |
| 15 | TTL level HIGH |
| 16 | TTL level LOW |

## 6.1.10 RECORDER OUTPUT Abnormal

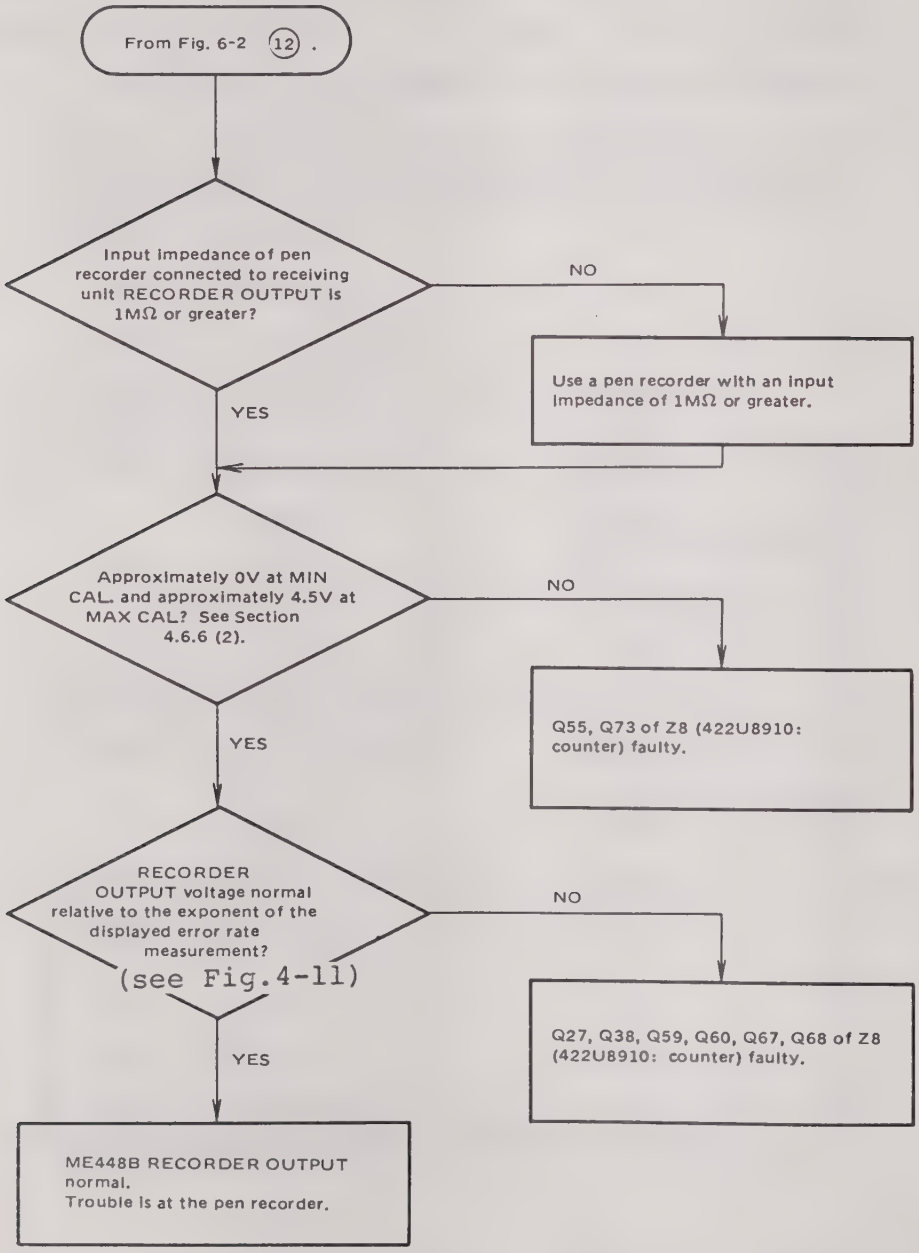


Fig. 6-17 RECORDER OUTPUT Circuit Troubleshooting

## LIST OF DRAWINGS (SENDING UNIT)

| | | Drawing No. (Page) | P.C. Board |
|---|---|---|---|
| 1. | BLOCK DIAGRAM OF ME448B SENDING UNIT | 43W26569 (6-25) | - |
| 2. | CIRCUIT DIAGRAM OF ME448A SENDING UNIT | 43W26570 (6-27) | - |
| 3. | PATTERN GENERATING CIRCUIT | 43W26403 (6-31) | 442U8906 |
| 4. | UNIPOLAR OUTPUT CIRCUIT (ECL) | 43W26404 (6-35) | 442U67730 |
| 5. | MOTHER BOARD | 44W69547 (6-37) | - |
| 6. | BIPOLAR OUTPUT CIRCUIT (24CH) | 43W26571 (6-39) | 422U8908 |
| 7. | CLOCK GENERATING CIRCUIT | 43W26406 (6-43) | 442U67722 |
| 8. | UNIPOLAR OUTPUT CIRCUIT (0/+2.4V) | 43W26407 (6-47) | 442U69093 |
| 9. | UNIPOLAR OUTPUT CIRCUIT (0/+3V) | 43W26408 (6-49) | 442U67732 |
| 10. | BIPOLAR OUTPUT CIRCUIT (UNBAL, 24CH) | 43W26572 (6-51) | 442U67726 |
| 11. | BIPOLAR OUTPUT CIRCUIT (BAL, 24CH) | 43W26573 (6-53) | 442U67728 |
| 12. | CIRCUIT DIAGRAM OF ME448A SENDING UNIT (WITH OPTION 45) | 43W26574 (6-55) | - |
| 13. | BIPOLAR OUTPUT CIRCUIT (24CH, WITH OPTION 45) | 43W26575 (6-59) | - |

## LIST OF DRAWINGS (RECEIVING UNIT)

| | CIRCUIT DIAGRAM | Drawing No. (Page) | P.C. Board |
|---|---|---|---|
| 1. | BLOCK DIAGRAM OF ME448B RECEIVING UNIT | 43W26576 (6-65) | - |
| 2. | CIRCUIT DIAGRAM OF ME448B RECEIVING UNIT | 43W26577 (6-69) | - |
| 3. | UNIPOLAR INPUT CIRCUIT (ECL) | 44W69558 (6-73) | 442U67736 |
| 4. | CODE SELECTION CIRCUIT (24CH) | 44W69821 (6-75) | 442U67742 |
| 5. | CODE SELECTION CIRCUIT (24CH, OPT40) | 44W69823 (6-77) | 442U67742 |
| 6. | ERROR DETECTION CIRCUIT (24CH) | 43W26578 (6-79) | 432U25519 |
| 7. | ERROR DETECTING CIRCUIT (24CH, OPT40) | 43W26579 (6-85) | 432U25519 |
| 8. | MOTHER BOARD | 44W69566 (6-91) | - |
| 9. | COUNTING CIRCUIT | 43W26417 (6-93) | 422U8910 |
| 10. | DISPLAY CIRCUIT | 43W26418 (6-99) | 442U67748 |
| 11. | BIPOLAR INPUT CIRCUIT (24CH, OPT22) | 44W69827 (6-101) | 442U67734 |
| 12. | CLOCK REGENERATING CIRCUIT (24CH, F1) | 43W26580 (6-103) | 442U67744 |
| 13. | CLOCK REGENERATING CIRCUIT (24CH, F3) | 43W26581 (6-105) | 442U67744 |
| 14. | CLOCK REGENERATING CIRCUIT (24CH, F1, F3) | 43W26582 (6-107) | 442U67746 |
| 15. | CLOCK REGENERATING CIRCUIT (24CH, F1, F2, F3) | 43W26943 (6-109) | 442U67744 |
| 16. | CLOCK REGENERATING CIRCUIT (24CH, F4) | 43W26583 (6-111) | 442U67744 |

## LIST OF DRAWINGS (RECEIVING UNIT) (Cont)

| | CIRCUIT DIAGRAM | Drawing No. (Page) | P.C. Board |
|---|---|---|---|
| 17 | UNIPOLAR INPUT CIRCUIT (0/+2V, OPT31) | 44W69576 (6-113) | 442U67738 |
| 18. | UNIPOLAR INPUT CIRCUIT (0/+3V, OPT32) | 44W69578 (6-115) | 442U67740 |
| 19. | CIRCUIT DIAGRAM OF ME448B RECEIVING UNIT (WITH OPTION 45) | 43W26584 (6-117) | - |
| 20. | COUNTING CIRCUIT (WITH OPTION 45) | 43W26424 (6-121) | 422U8910 |
| 21. | COUNTING CIRCUIT (WITH OPTION 44) | 43W25594 (6-127) | 422U8910 |
| 22. | COUNTING CIRCUIT (WITH OPTION 44+45) | 43W25981 (6-133) | 422U8110 |

57

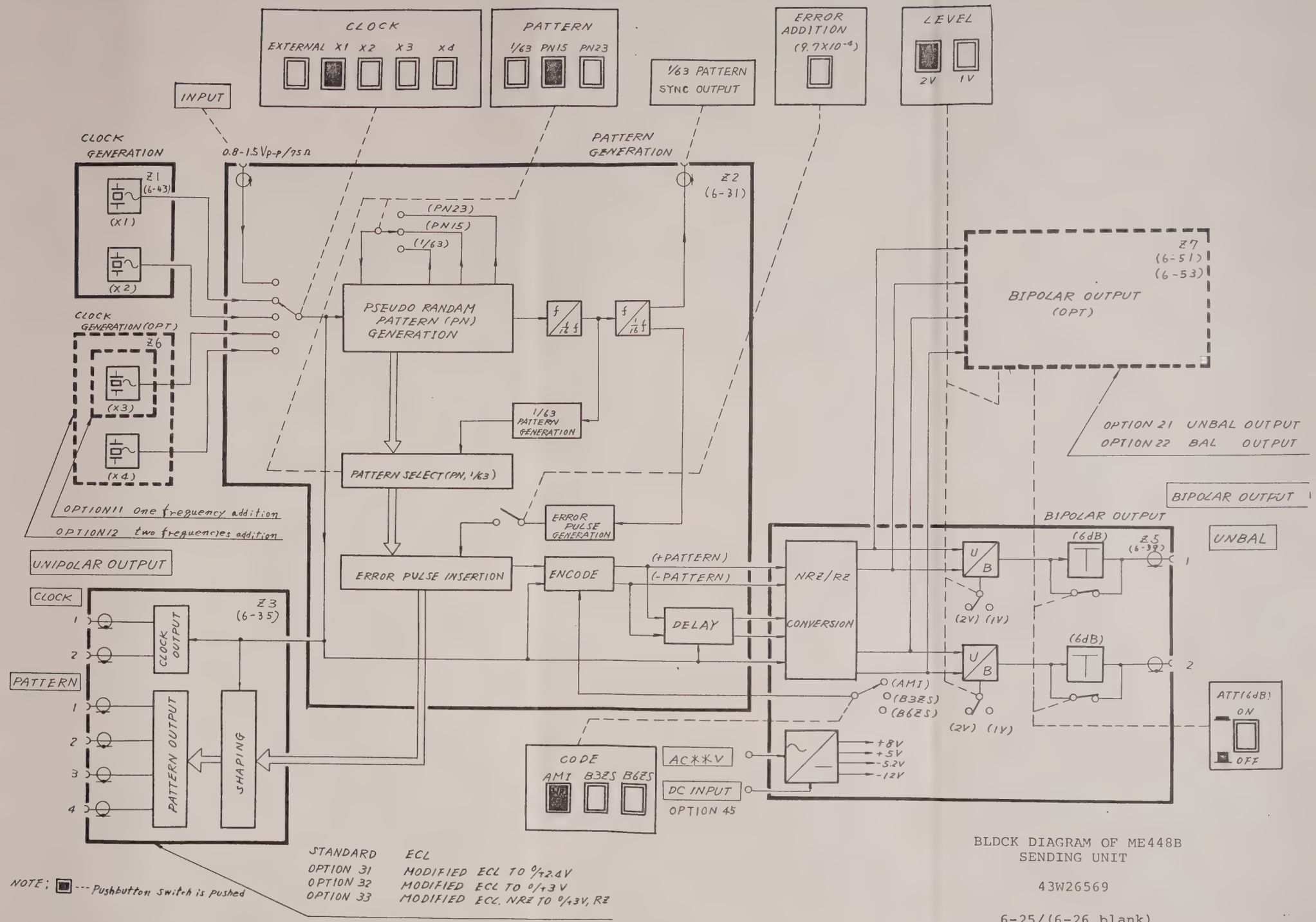


BLDCK DIAGRAM OF ME448B
SENDING UNIT

43W26569

6-25/(6-26 blank)

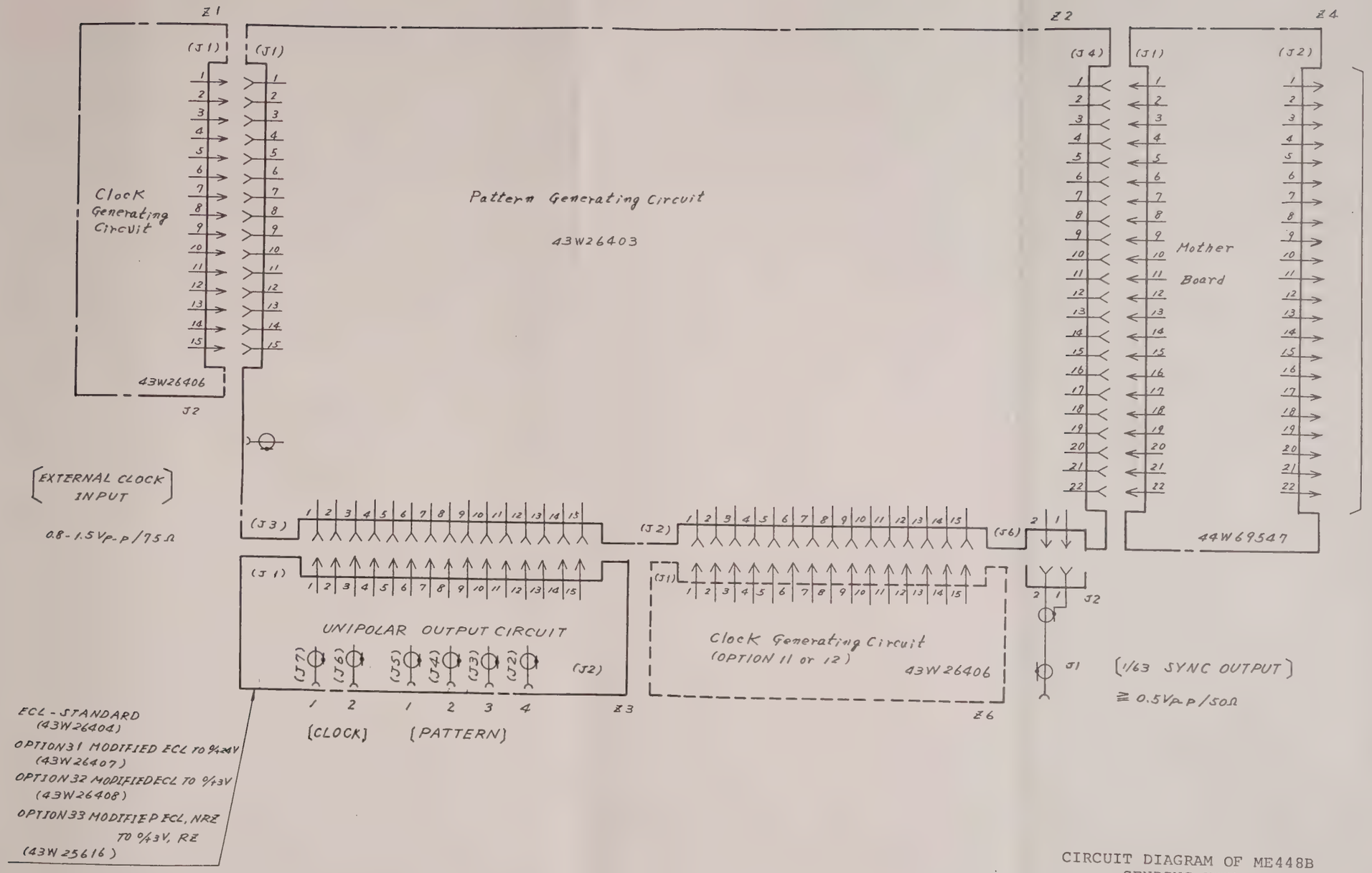


| Component list | 44W69813 |
|---|---|

CIRCUIT DIAGRAM OF ME448B
SENDING UNIT

43W26570 (1/2)

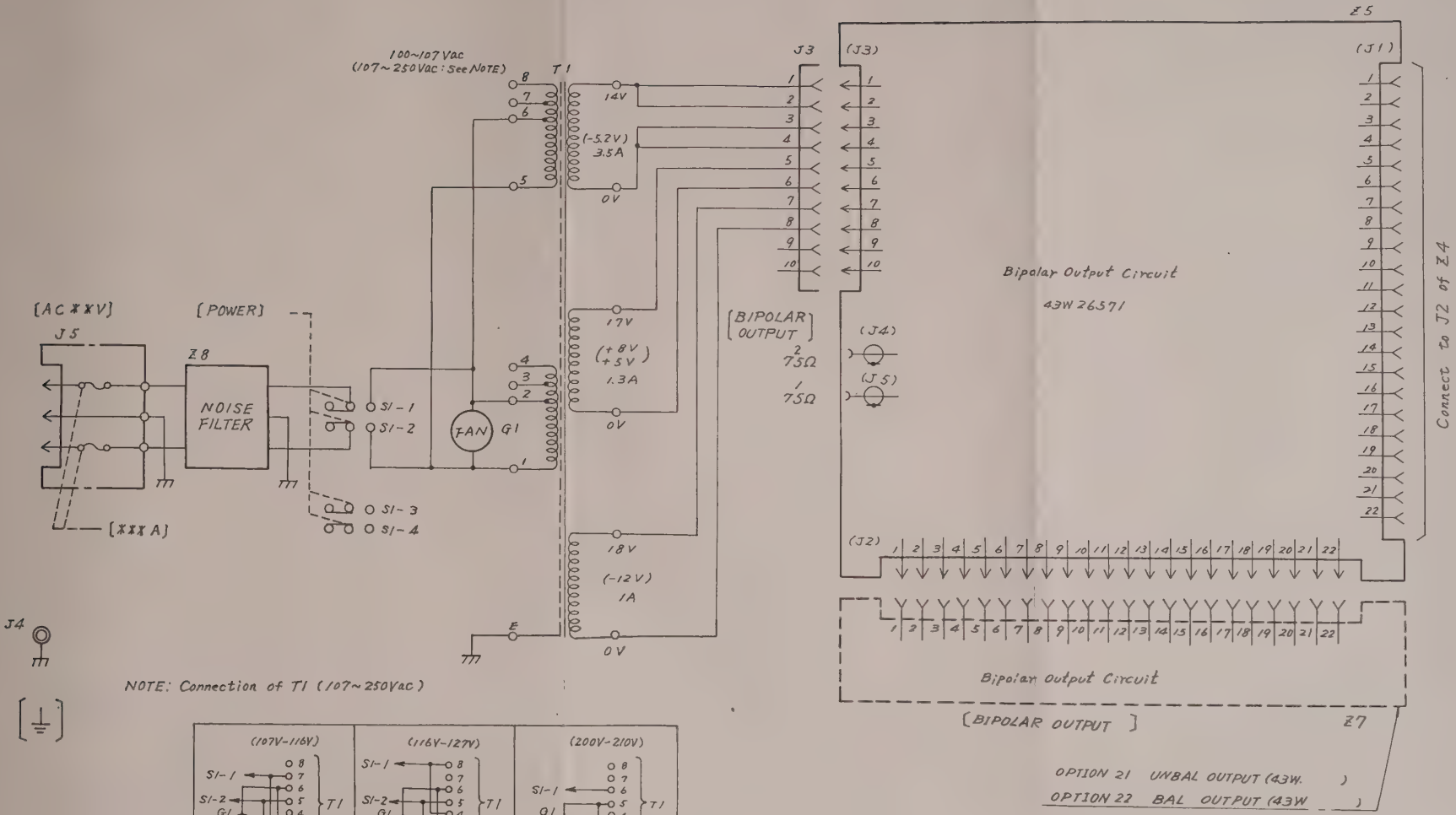


CIRCUIT DIAGRAM OF ME448B
SENDING UNIT

43W26570 (2/2)

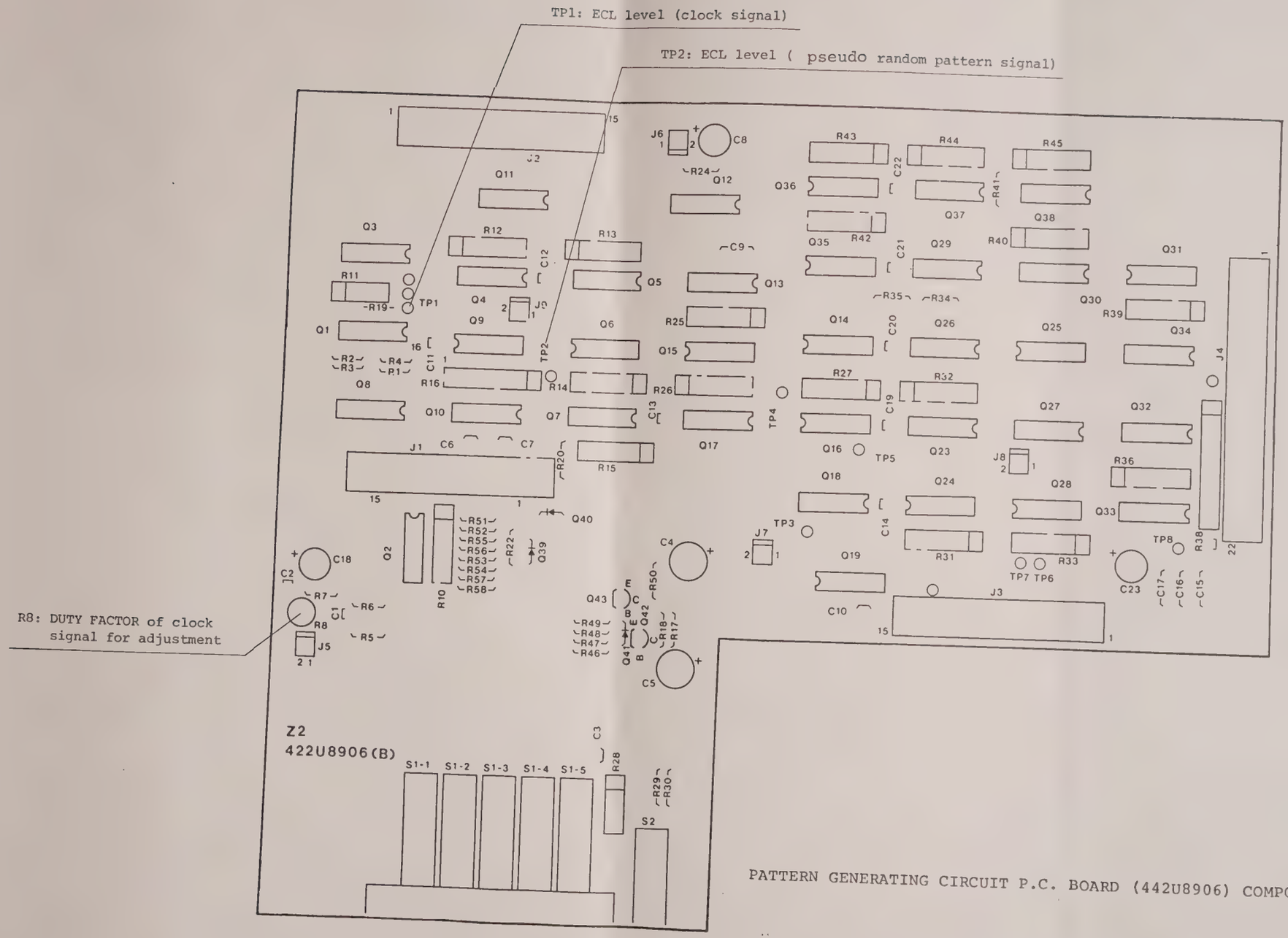


PATTERN GENERATING CIRCUIT P.C. BOARD (442U8906) COMPONENT LOCATION

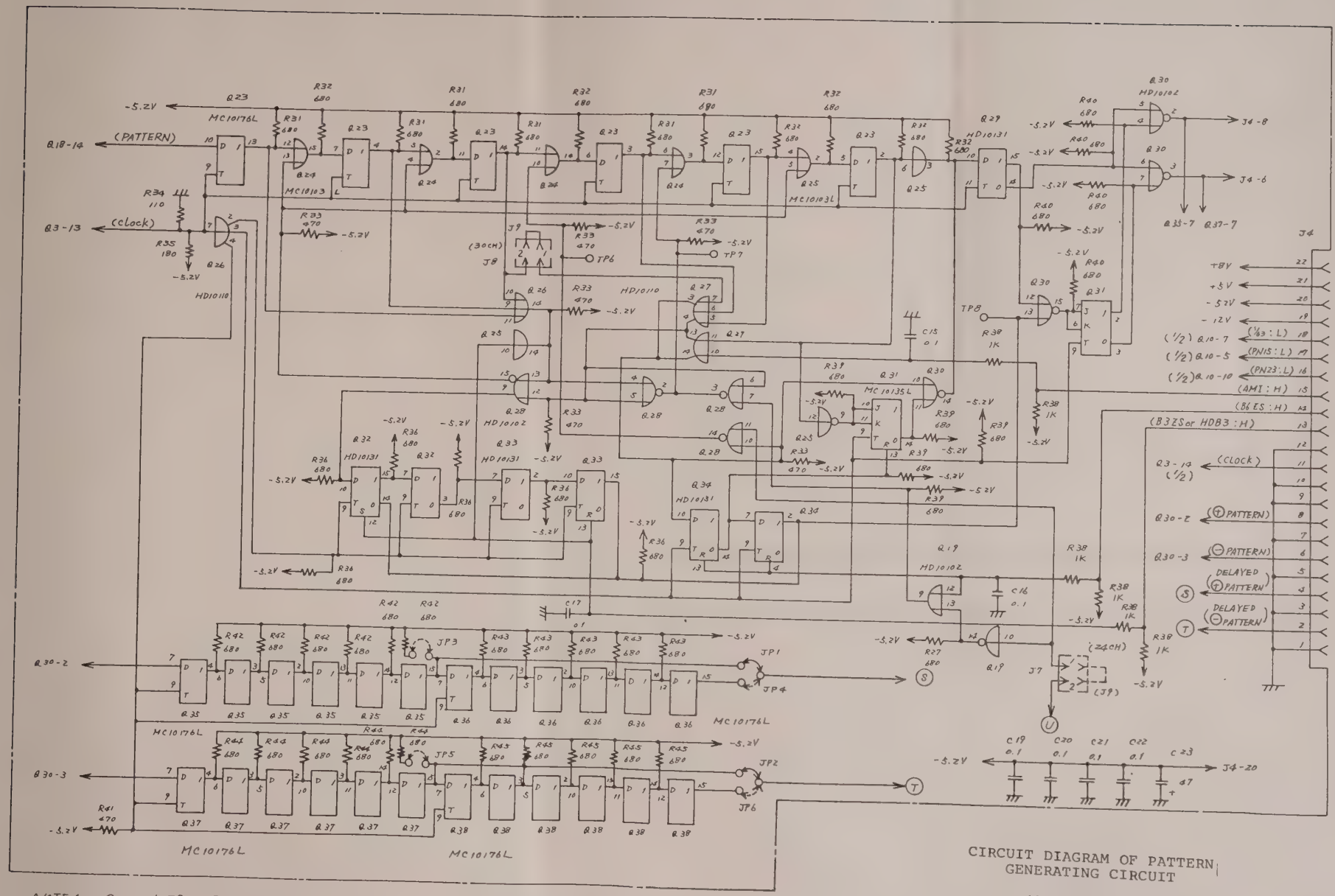


NOTE 1 Connect J9 to J8 (for 30CH)
Connect J9 to J7 (for 24CH)

NOTE 2. Short JP1 and JP2 (for 6 bits delay)
Short JP3, 4, 5, and 6 (for 12 bits delay)

CIRCUIT DIAGRAM OF PATTERN GENERATING CIRCUIT

43W26403 (2/2)

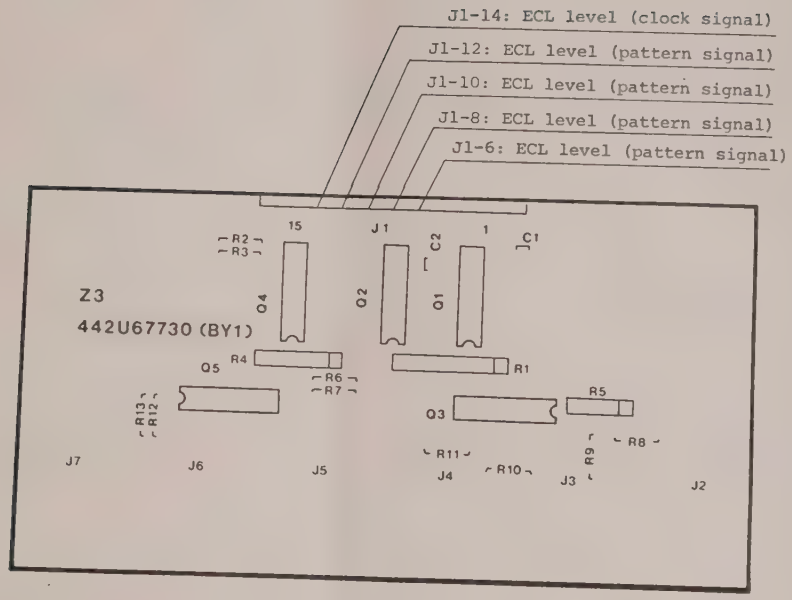


UNIPOLAR OUTPUT CIRCUIT (ECL) P.C. BOARD (442U67730) COMPONENT LOCATION

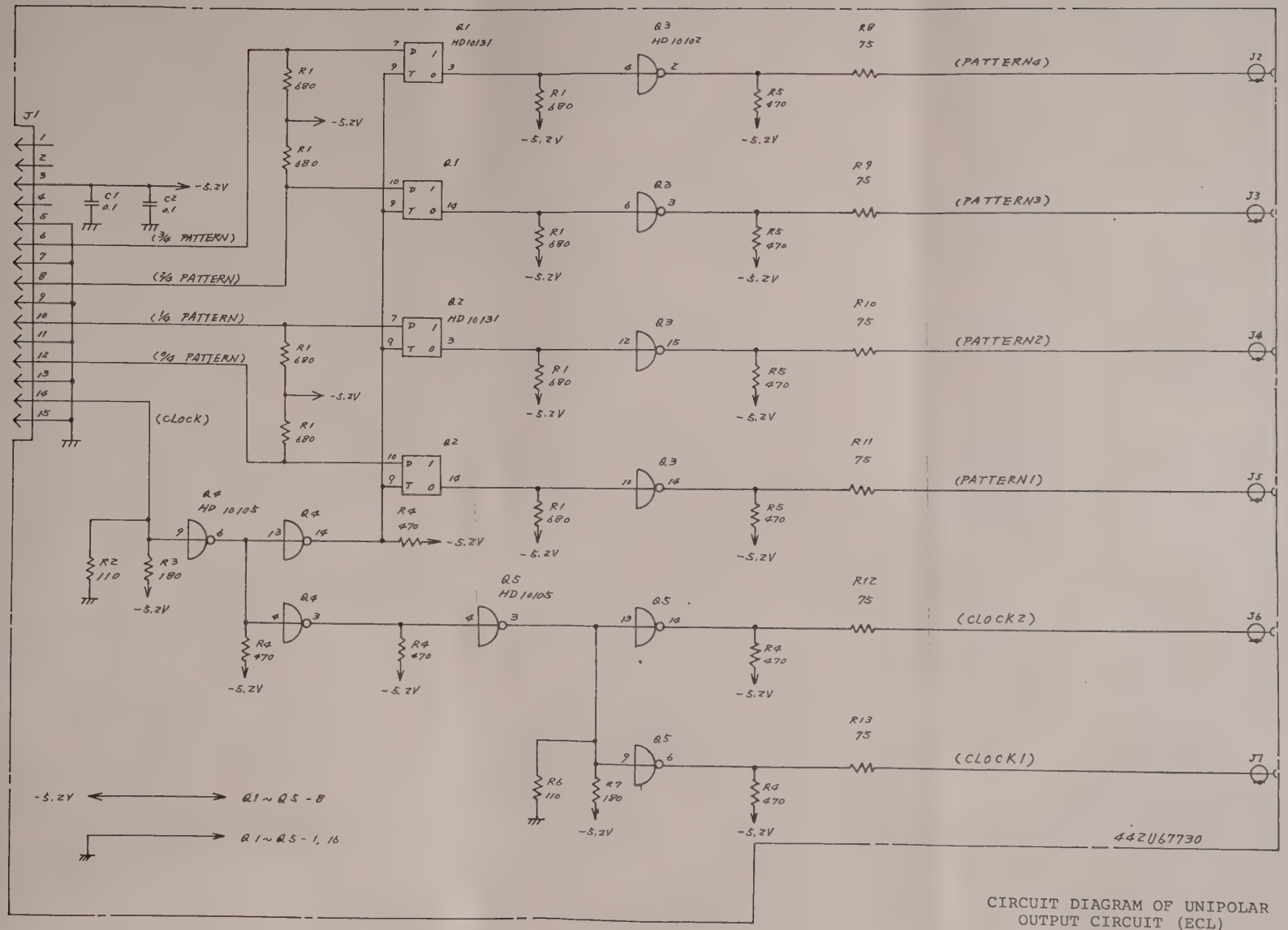


CIRCUIT DIAGRAM OF UNIPOLAR OUTPUT CIRCUIT (ECL)

43W26404

Component List ##W69545

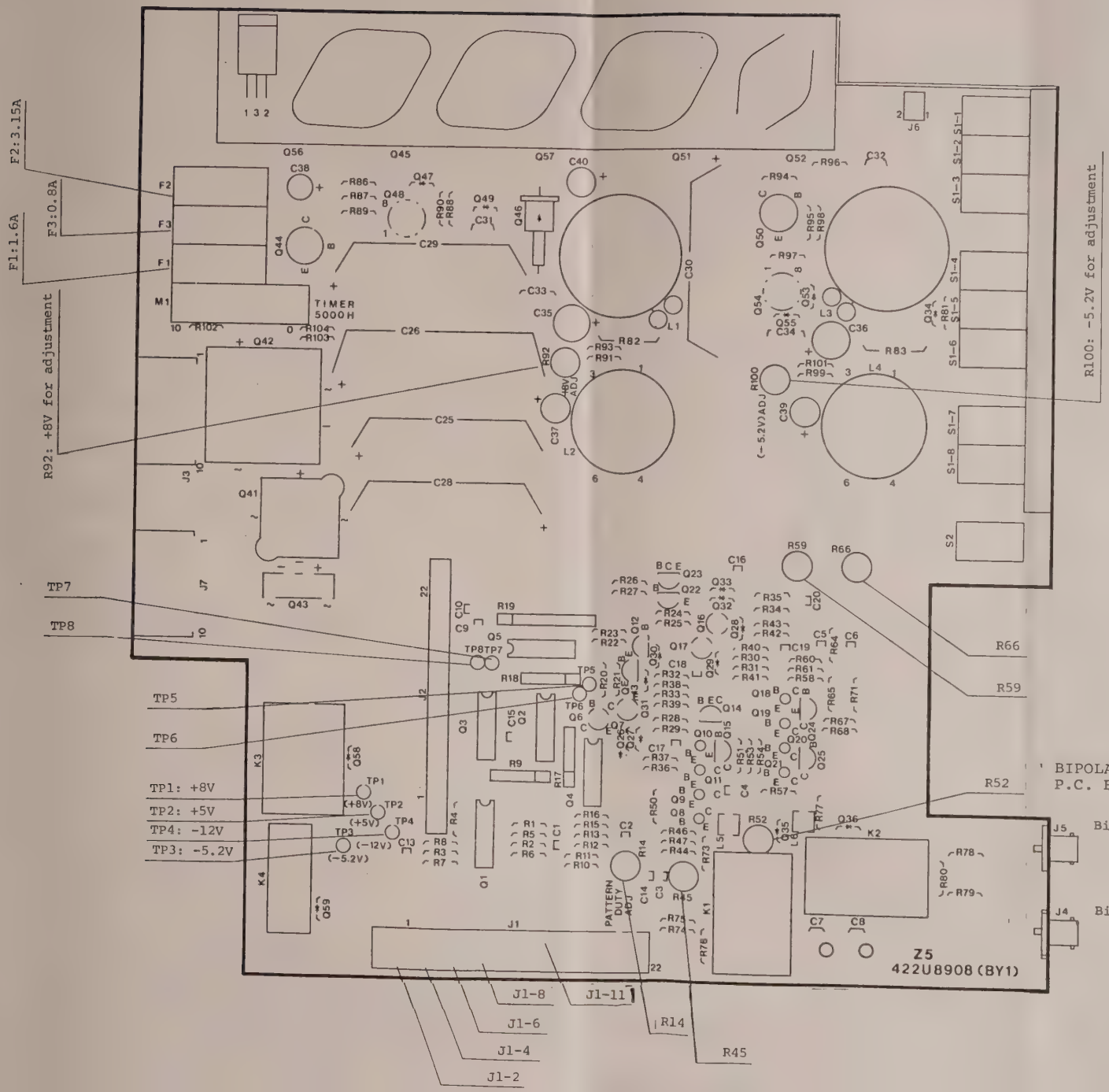


BIPOLAR OUTPUT CIRCUIT (24CH)
P.C. BOARD (422U8908) COMPONENT LOCATION

Bipolar signal output

Bipolar signal output

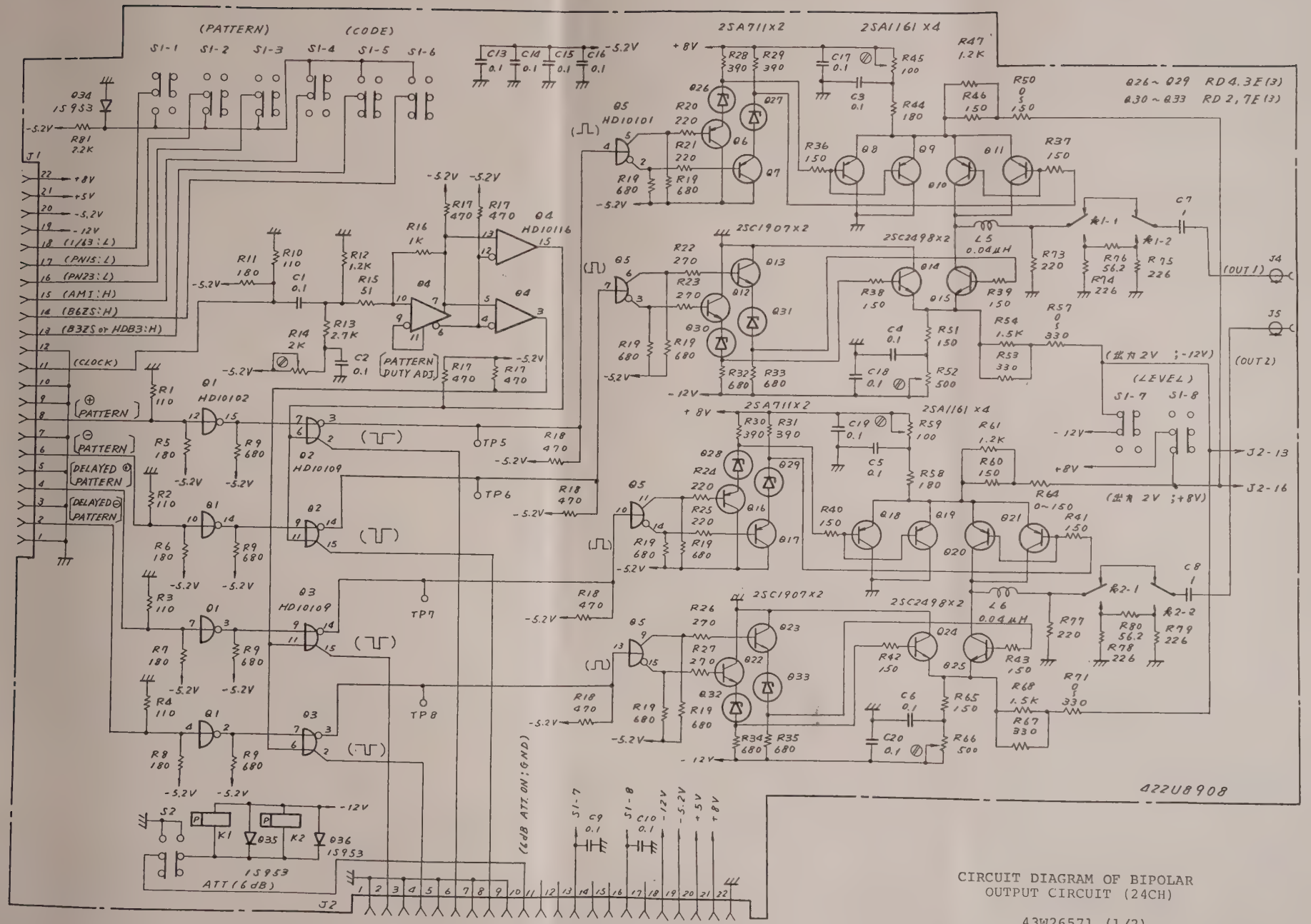


CIRCUIT DIAGRAM OF BIPOLAR
OUTPUT CIRCUIT (24CH)

43W26571 (1/2)

6-39/(6-40 blank)

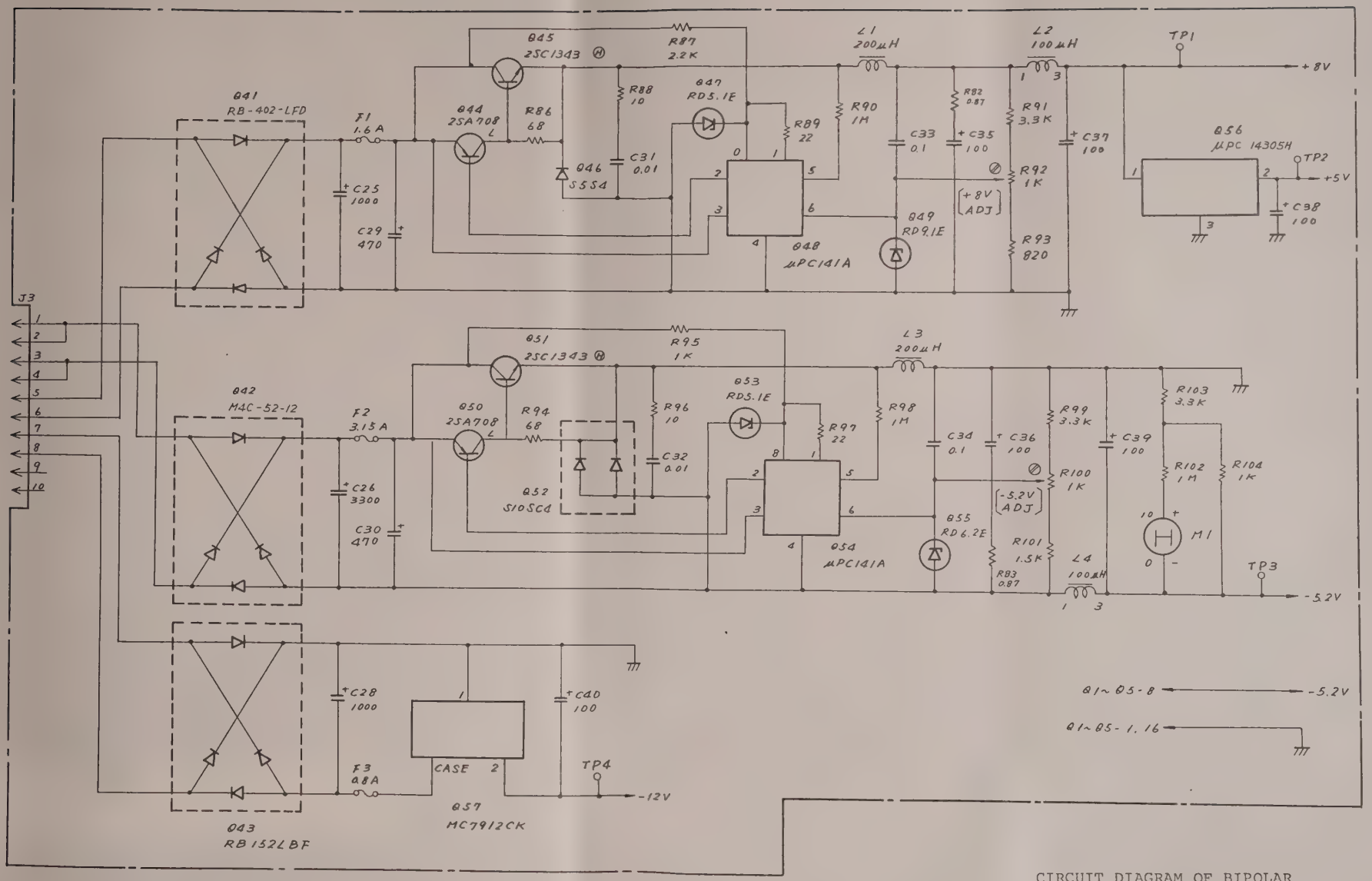


CIRCUIT DIAGRAM OF BIPOLAR OUTPUT (24CH)

43W56571 (2/2)

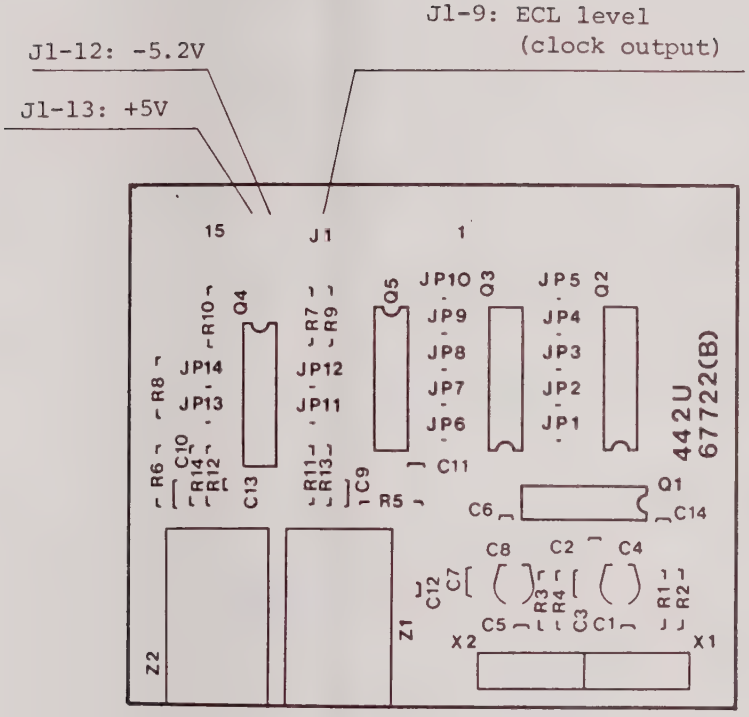


CLOCK GENERATING CIRCUIT P.C. BOARD (442U67722)
COMPONENT LOCATION

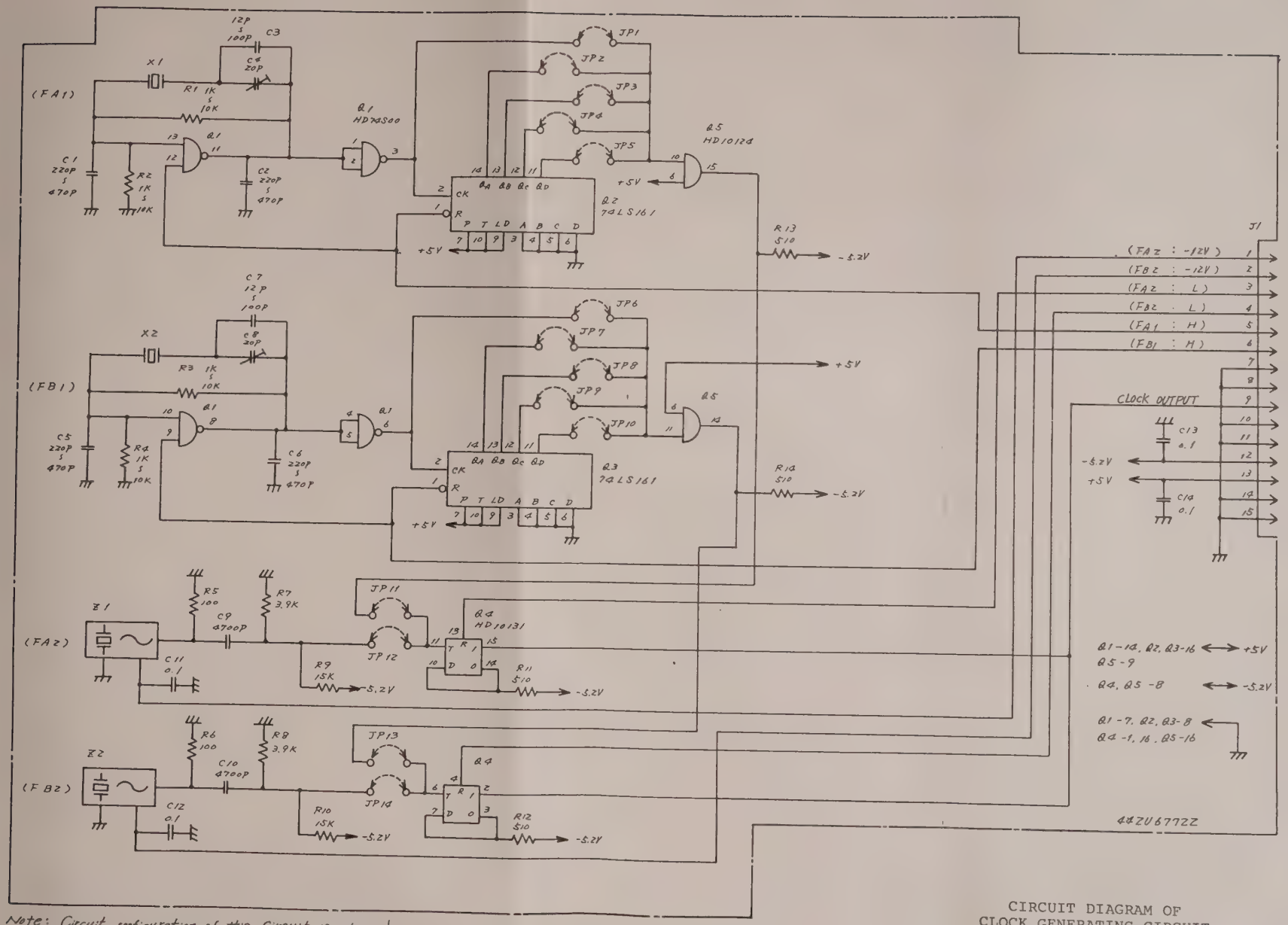


Note: Circuit configuration of this circuit is changed depend on generating frequency and OPTION. (See 43W26406. 3/z)

Comment List 44W69547

CIRCUIT DIAGRAM OF
CLOCK GENERATING CIRCUIT

43W26406 (1/2)

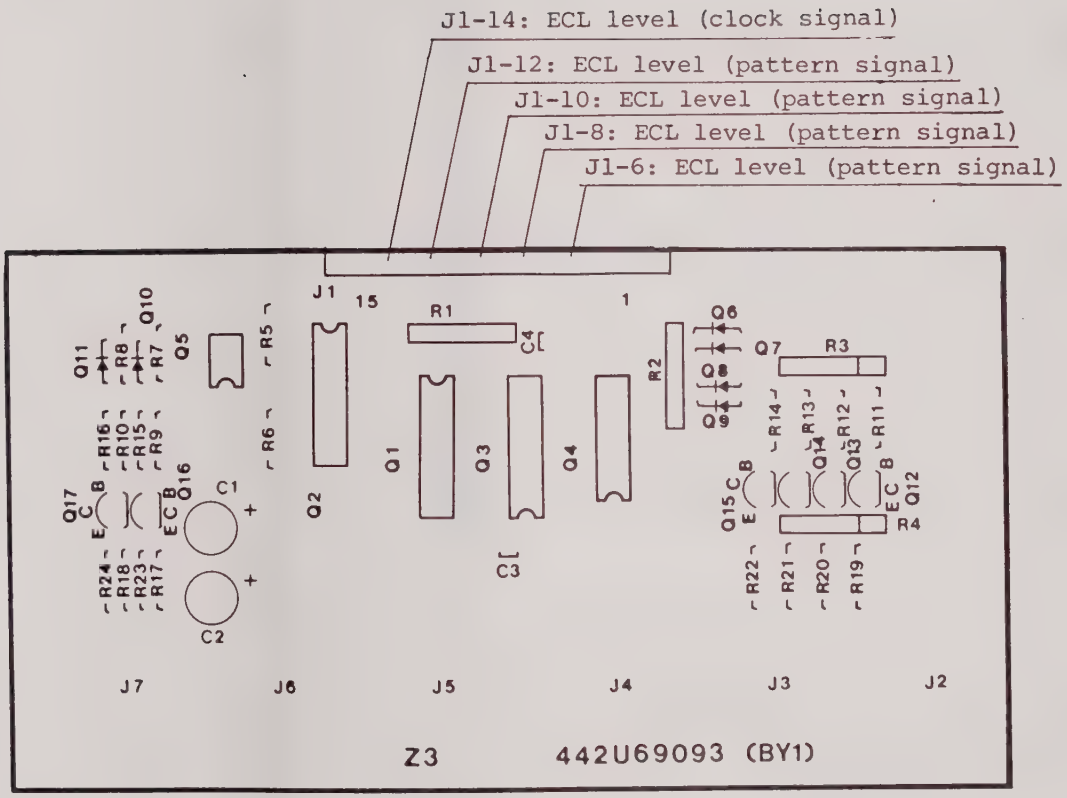


UNIPOLAR OUTPUT CIRCUIT (0/+2.4V) P.C. BOARD (442U69093)
COMPONENT LOCATION

関係図番

| 記号 | 来歴 | 年月日 | 氏 |
|---|---|---|---|
| | | | |

CIRCUIT CONFIGURATION TABLE

| | | Standard (two frequencies) | OPTION 11 (one frequency addition) | OPTION 12 (two frequencies addition) |
|---|---|---|---|---|
| One frequency mounting | 0.1 to < 10MHz | | $F_{A1}$ | |
| | 10MHz to 50MHz | | $F_{A2}$ | |
| two frequencies mounting | two frequencies 0.1 to < 10MHz | $F_{A1}$ $F_{B1}$ | | $F_{A1}$ $F_{B1}$ |
| | two frequencies 10MHz to 50MHz | $F_{A2}$ $F_{B2}$ | | $F_{A2}$ $F_{B2}$ |
| | One frequency 0.1MHz to < 10MHz One frequency 10MHz to 50MHz | $F_{A1}$ $F_{B2}$ | | $F_{A1}$ $F_{B2}$ |

CIRCUIT DIAGRAM OF CLOCK GENERATING CIRCUIT

43W26406 (2/2)



入庫

No.153 A3 5.000

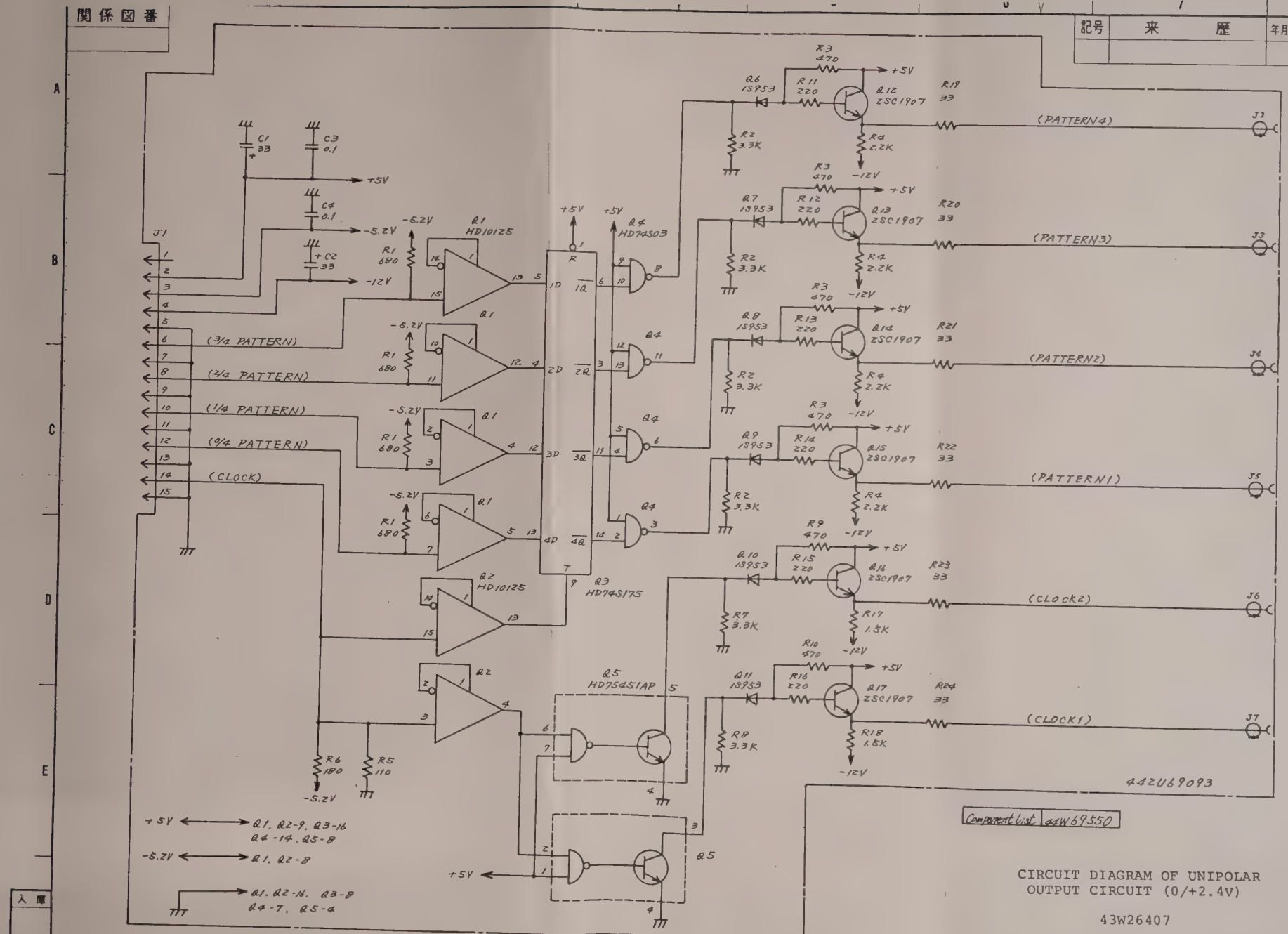


CIRCUIT DIAGRAM OF UNIPOLAR OUTPUT CIRCUIT (0/+2.4V)

43W26407

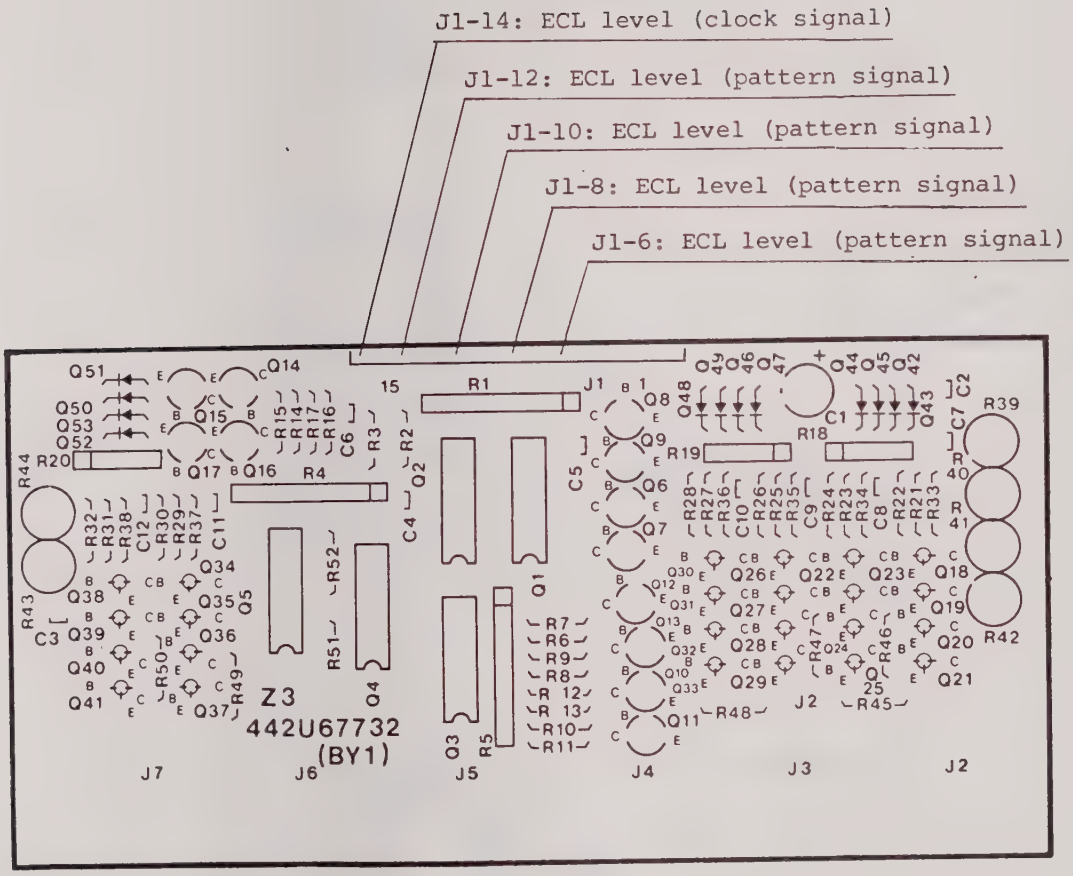


UNIPOLAR OUTPUT CIRCUIT (0/+3V) P.C. BOARD (442U67732)
COMPONENT LOCATION

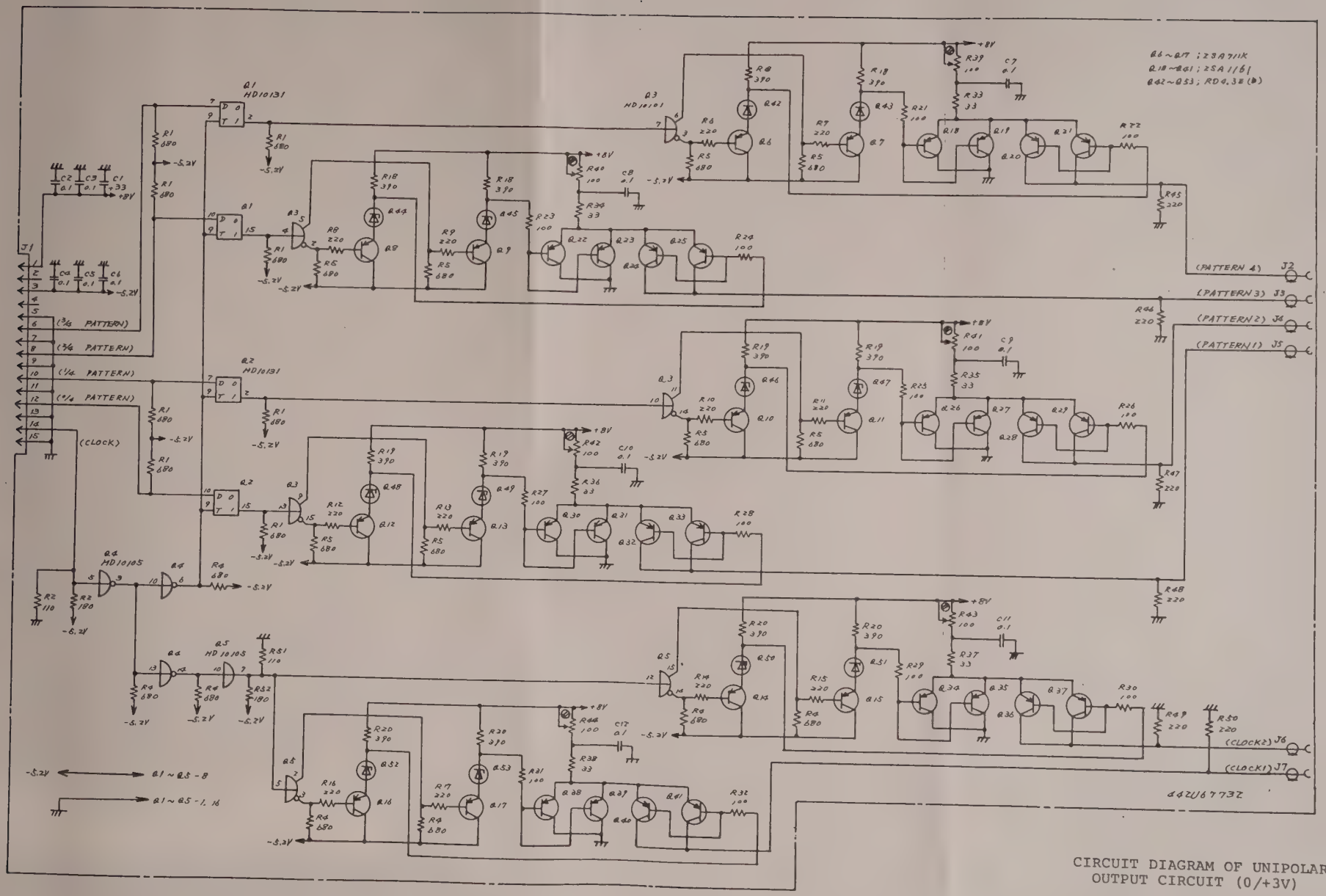


Component List 44W69551

CIRCUIT DIAGRAM OF UNIPOLAR OUTPUT CIRCUIT (0/+3V)

43W26408

6-49

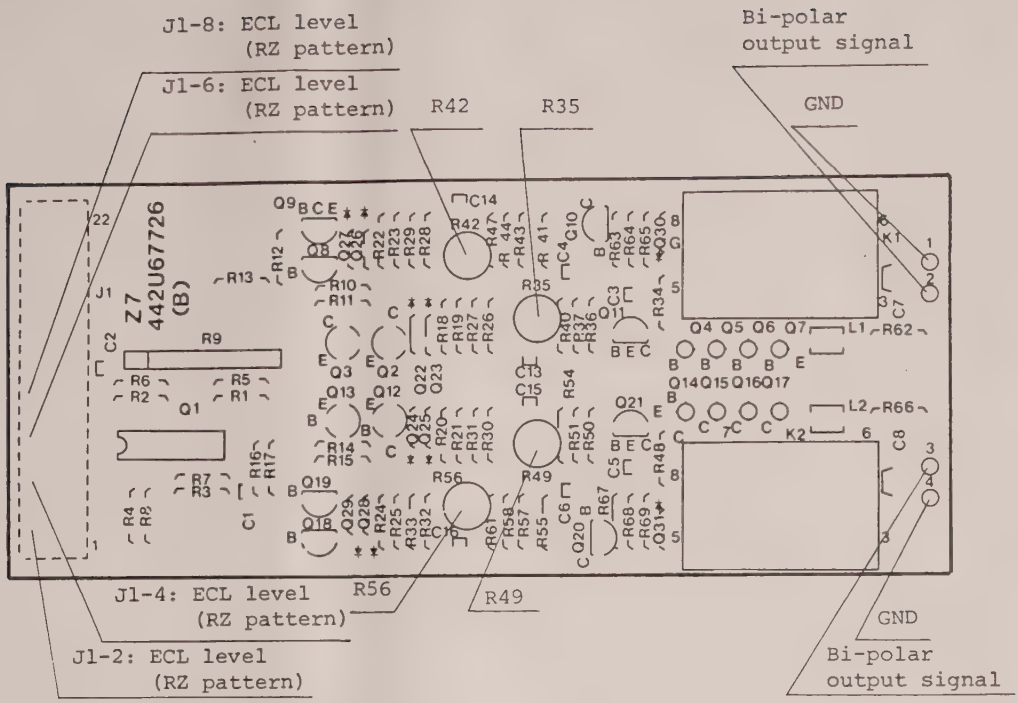


BIPOLAR OUTPUT CIRCUIT (UNBAL, 24CH) P.C. BOARD (442U67726)
COMPONENT LOCATION

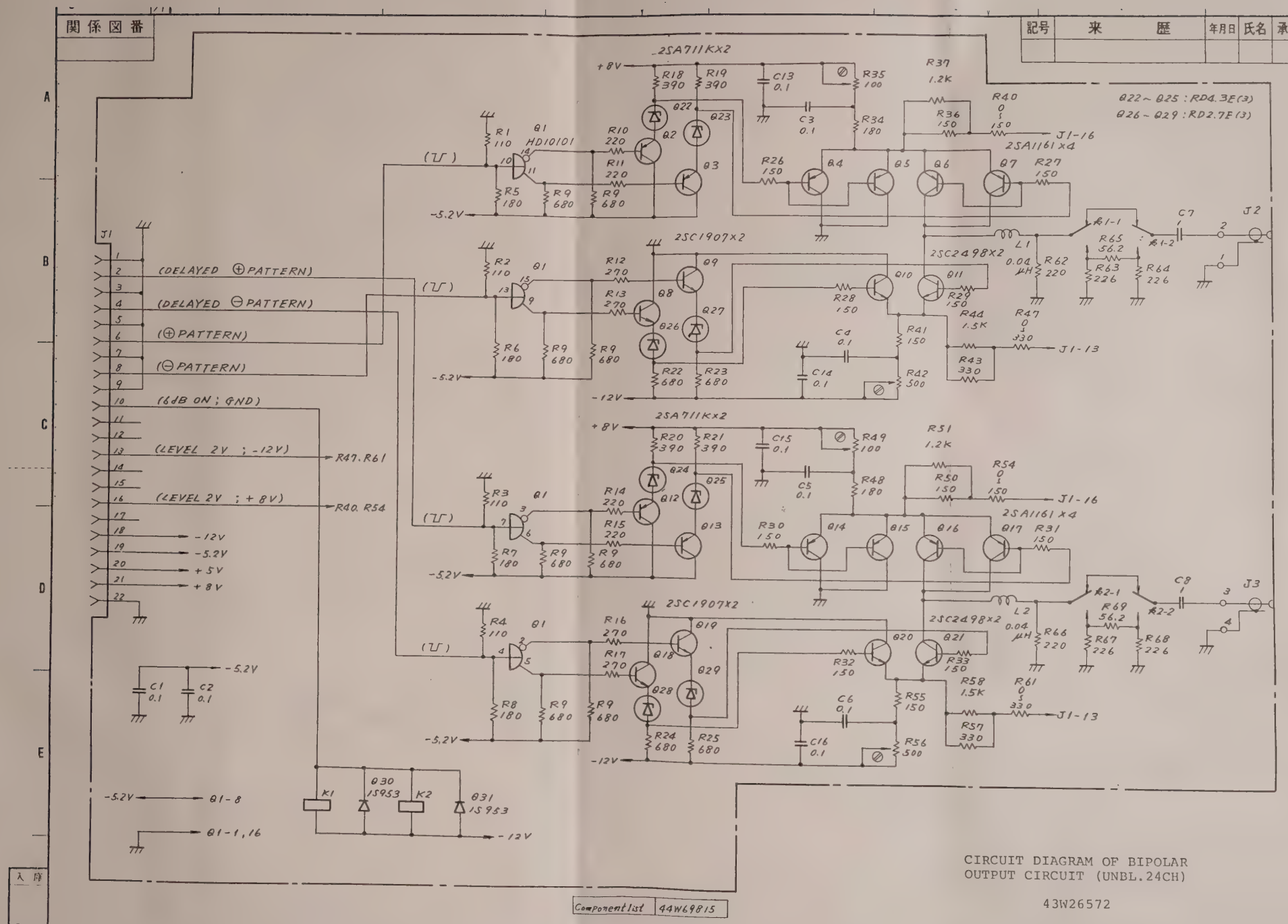


CIRCUIT DIAGRAM OF BIPOLAR
OUTPUT CIRCUIT (UNBL.24CH)

43W26572

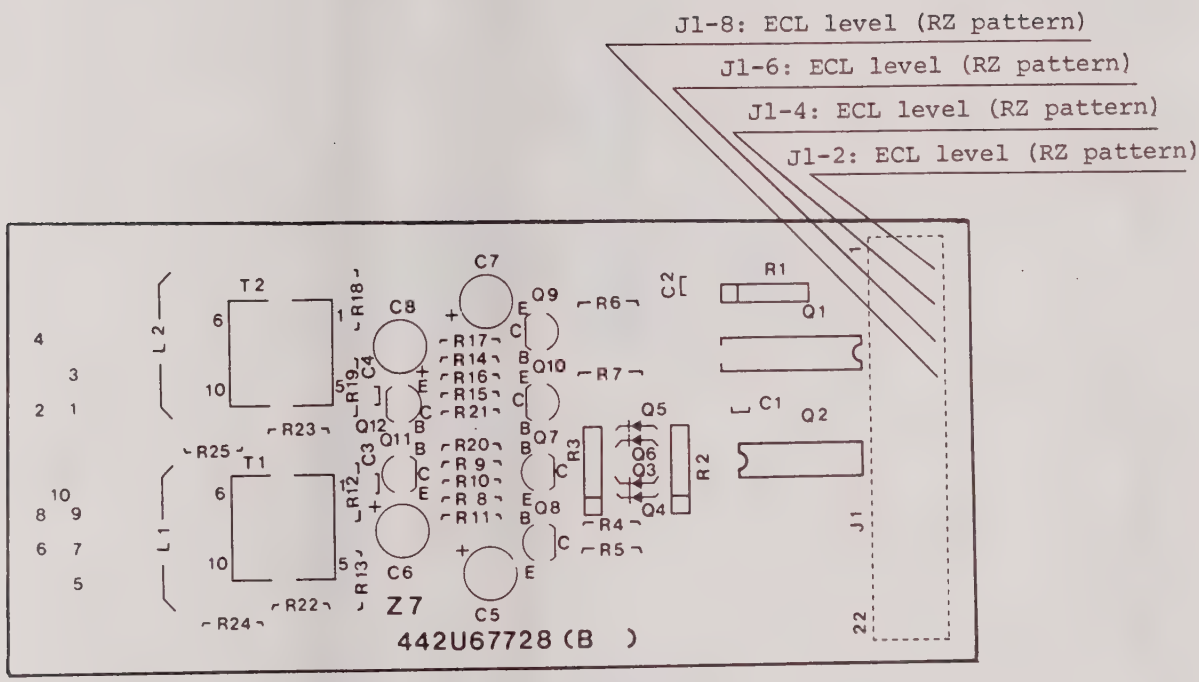


BIPOLAR OUTPUT CIRCUIT (BAL, 24CH) P.C. BOARD (442U67728)
COMPONENT LOCATION

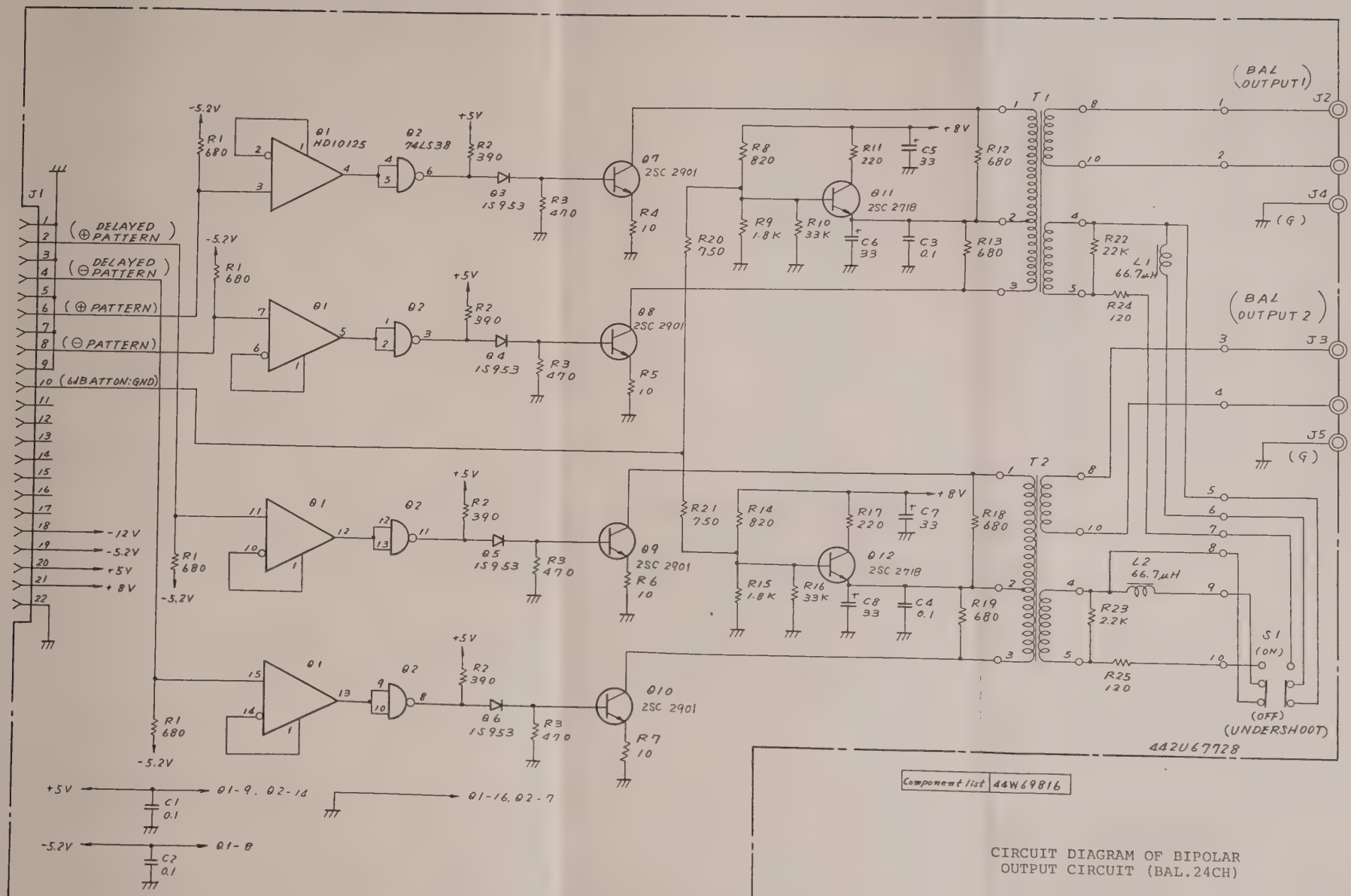


CIRCUIT DIAGRAM OF BIPOLAR
OUTPUT CIRCUIT (BAL.24CH)

43W26573

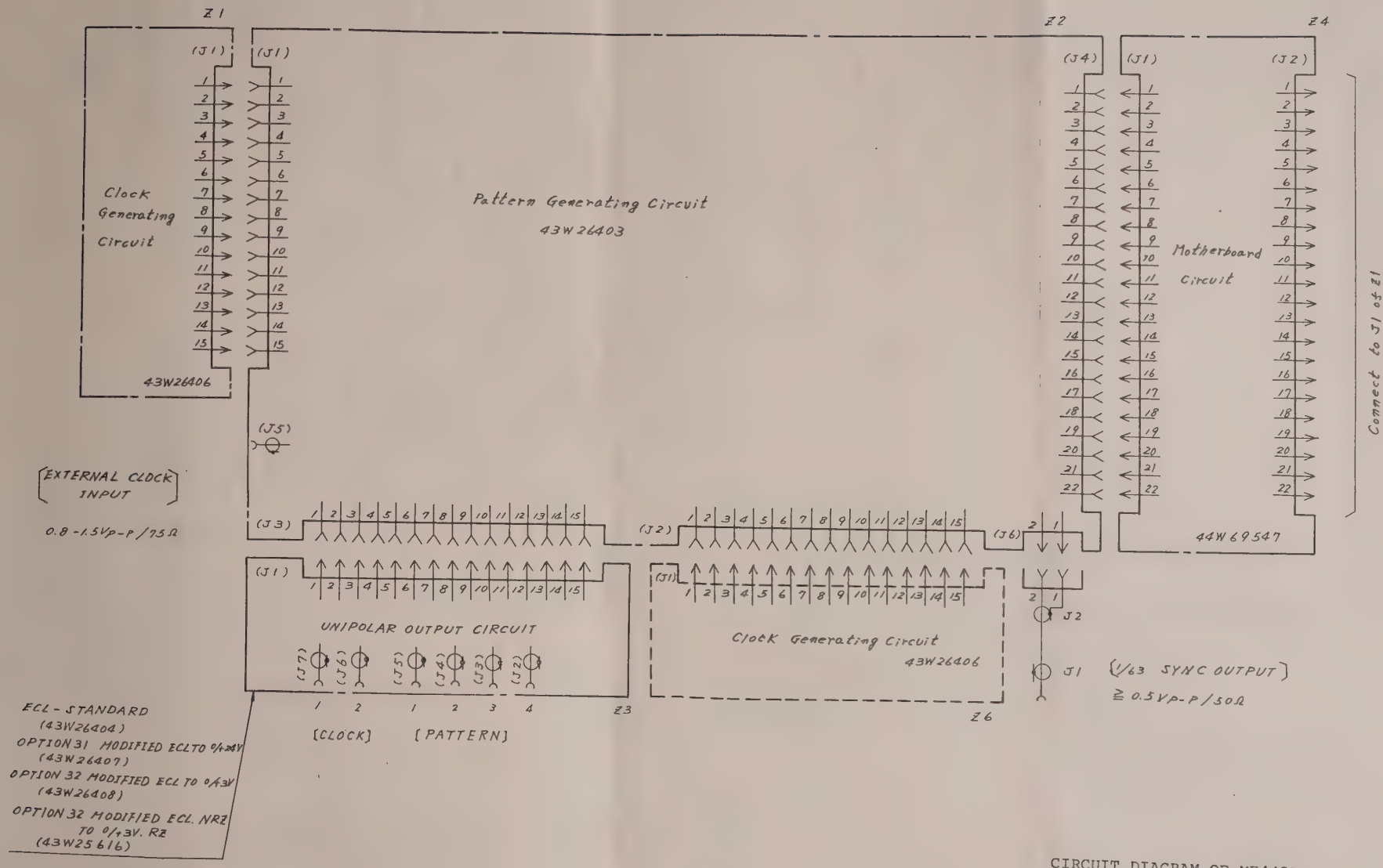


Component list 44W69817

CIRCUIT DIAGRAM OF ME448B
SENDING UNIT (WITH OPTION 45)

43W26574 (1/2)

6-55/(6-56 blank)

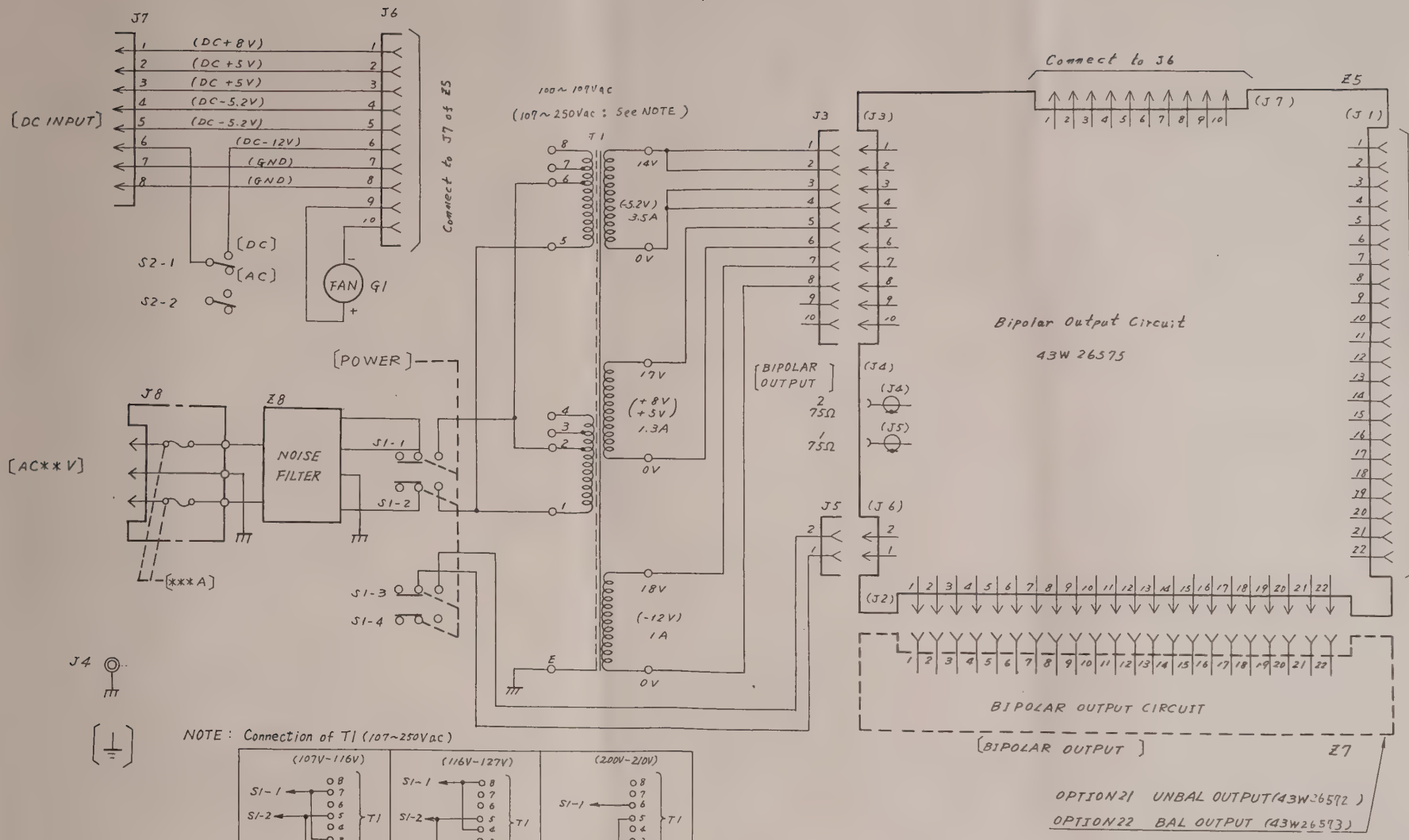


NOTE : Connection of T1 (107~250Vac)

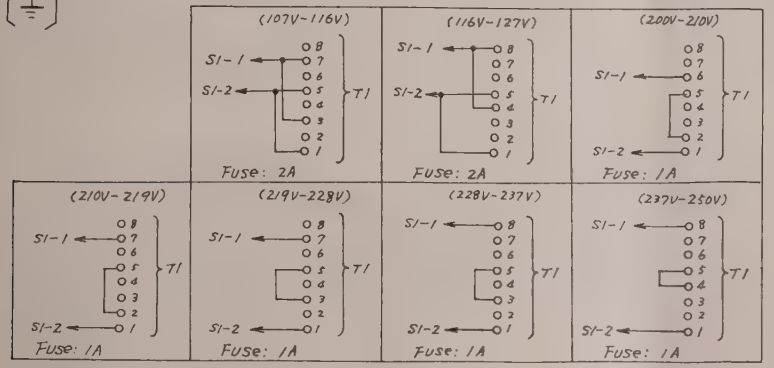


CIRCUIT DIAGRAM OF ME448A
SENDING UNIT (WITH OPTION 45)

43W26574 (2/2)

6-57/(6-58 blank)

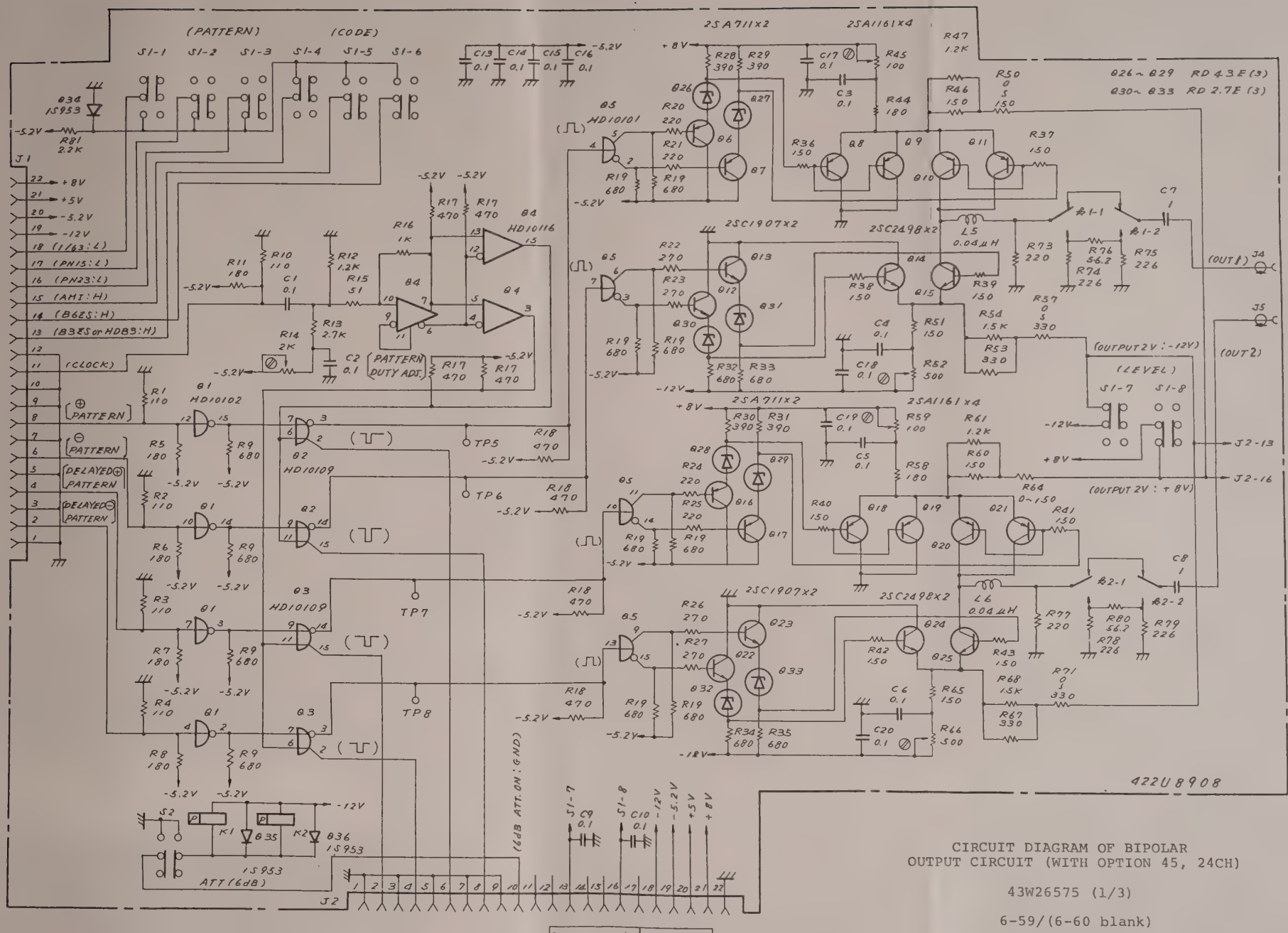


CIRCUIT DIAGRAM OF BIPOLAR
OUTPUT CIRCUIT (WITH OPTION 45, 24CH)

43W26575 (1/3)

6-59/(6-60 blank)

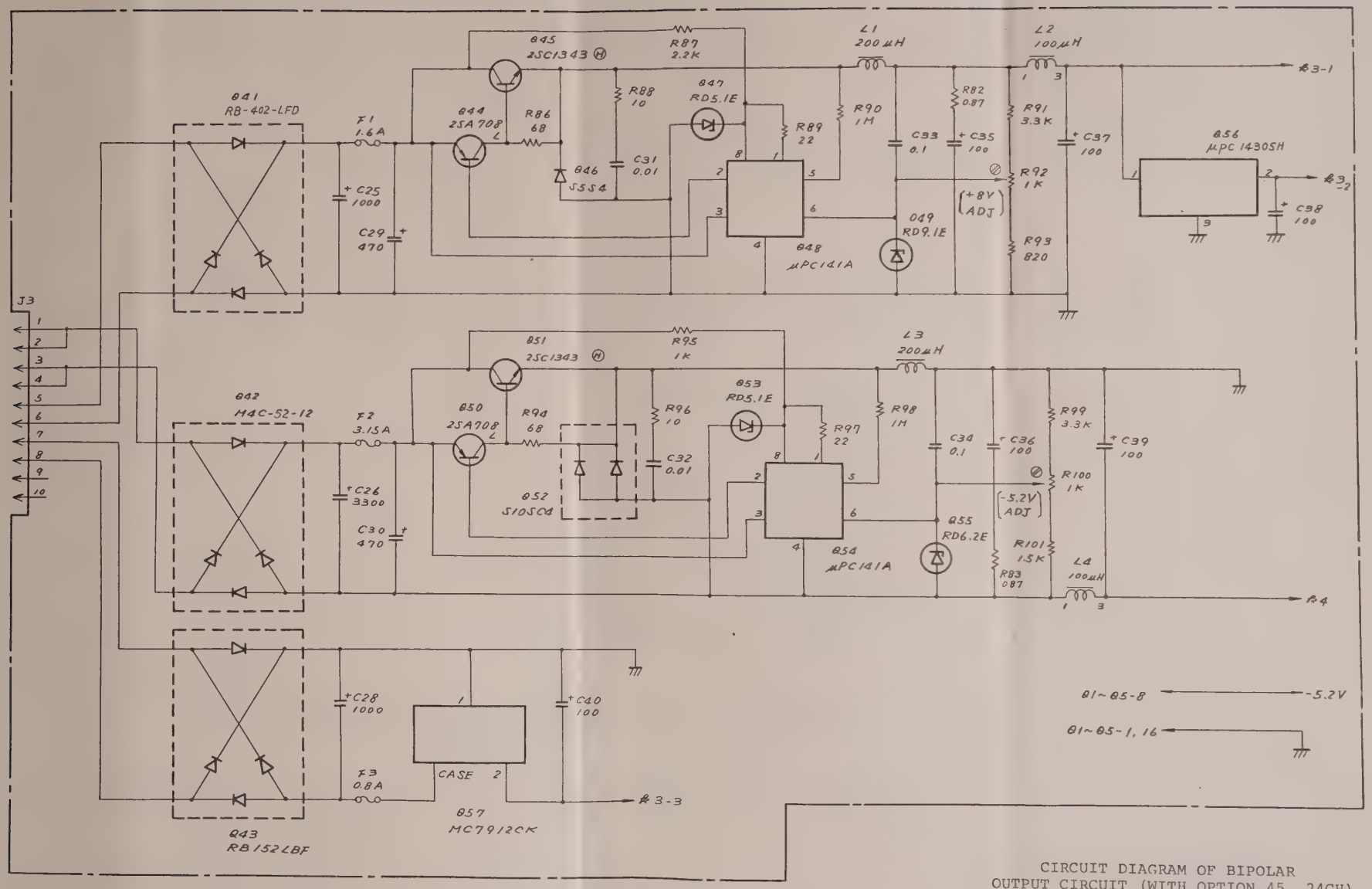


CIRCUIT DIAGRAM OF BIPOLAR
OUTPUT CIRCUIT (WITH OPTION 45, 24CH)

43W26575 (2/3)

6-61/(6-62 blank)

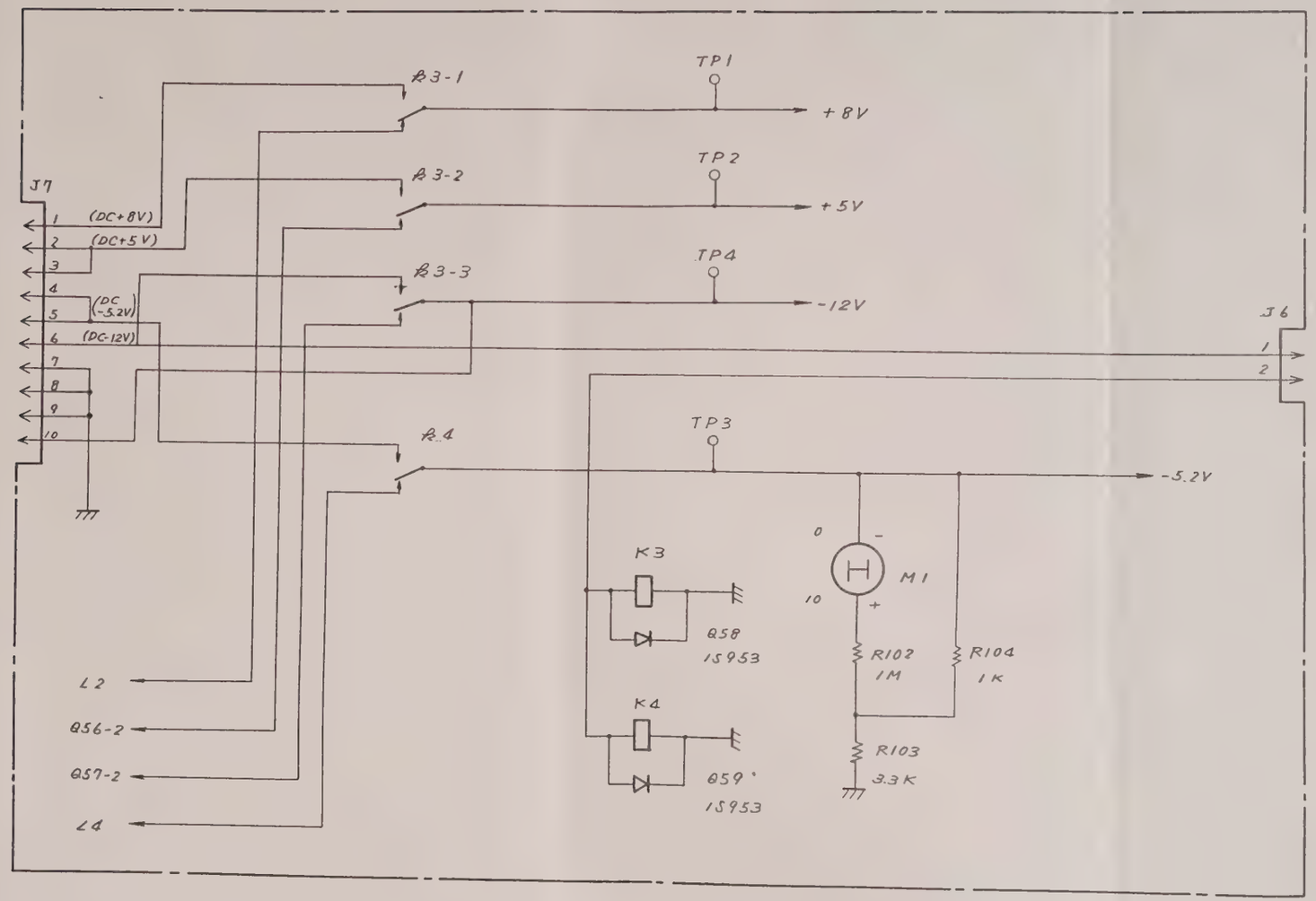


CIRCUIT DIAGRAM OF BIPOLAR
OUTPUT CIRCUIT (WITH OPTION 45, 24CH)

43W26575 (3/3)

6-63/(6-64 blank)

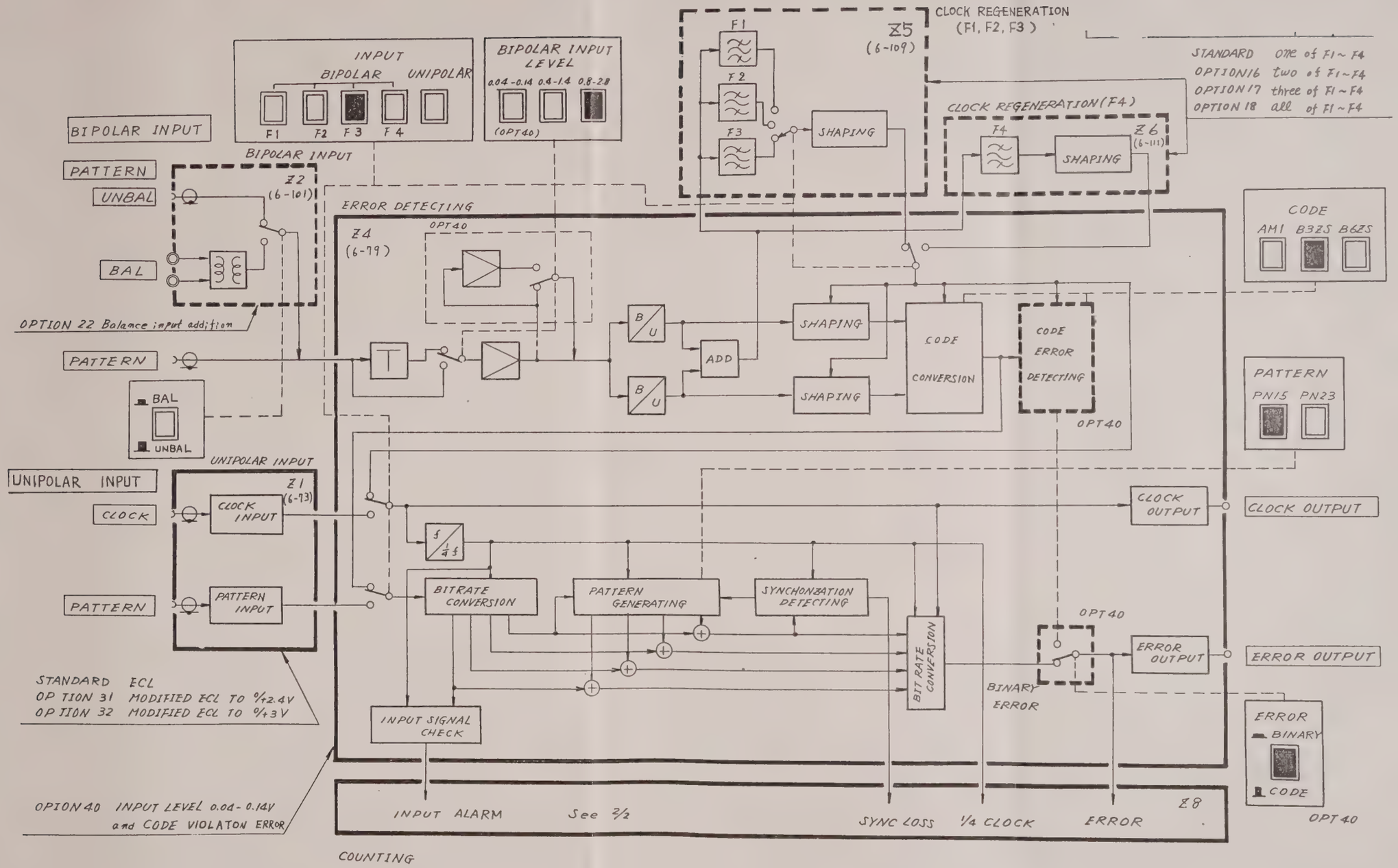


Note : ■ --- Poshbotton switon is poshed

BLOCK DIAGRAM OF ME448B
RECEIVING UNIT

43W26576 (1/2)

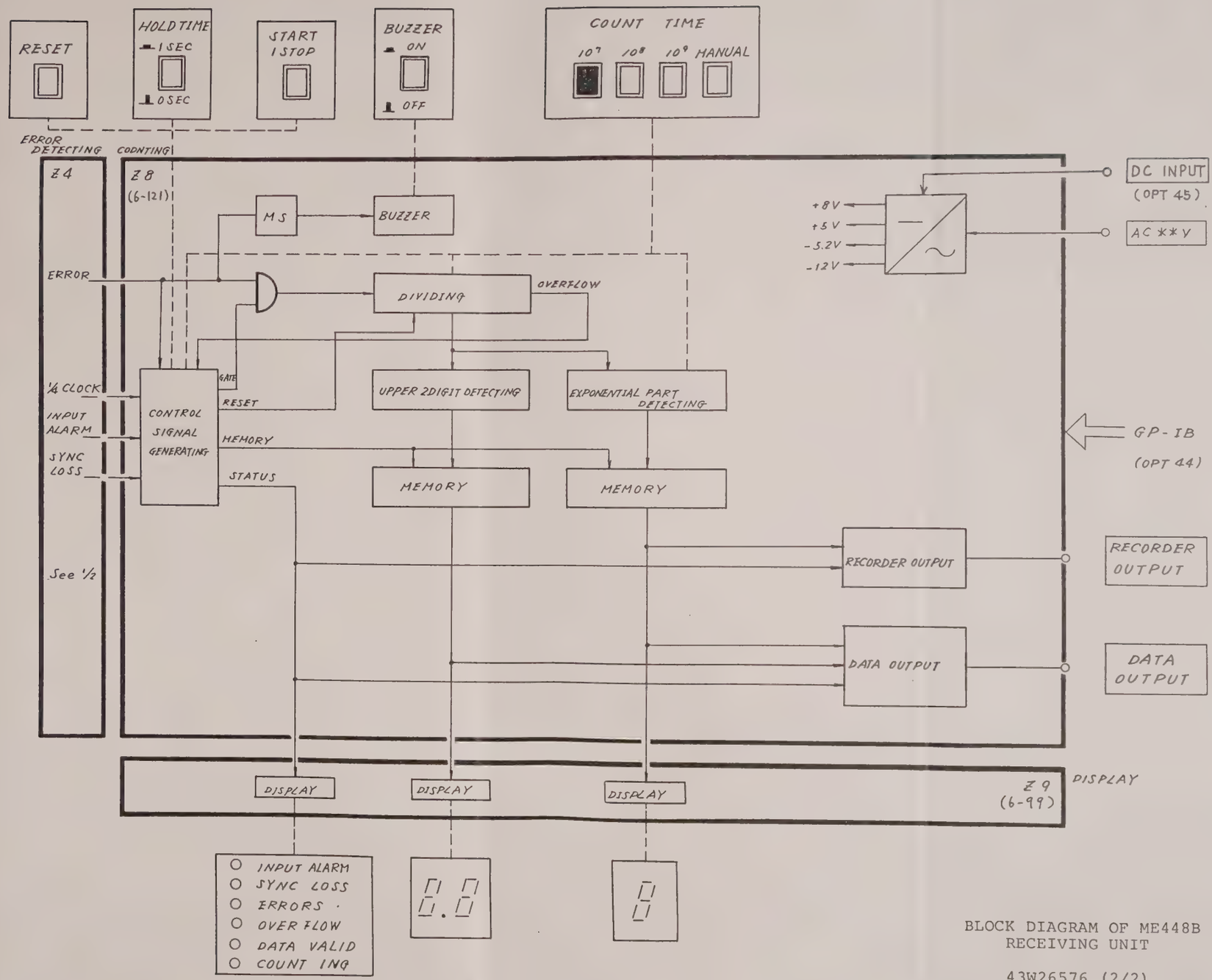


BLOCK DIAGRAM OF ME448B
RECEIVING UNIT

43W26576 (2/2)

6-67/(6-68 blnak)

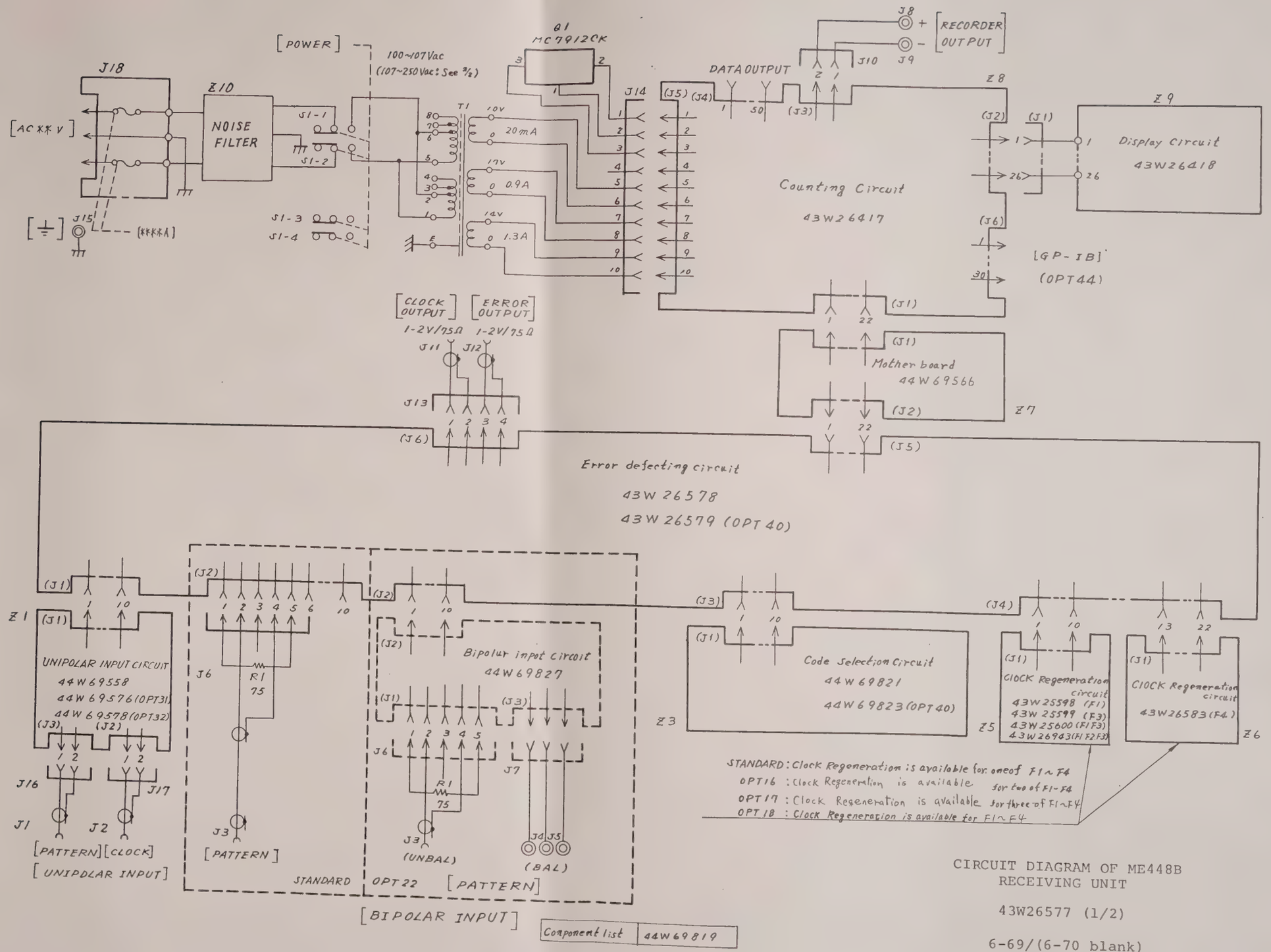


| Component list | 44W69819 |
|---|---|

CIRCUIT DIAGRAM OF ME448B
RECEIVING UNIT

43W26577 (1/2)

## Connection of T1 (107 ~ 250Vac)

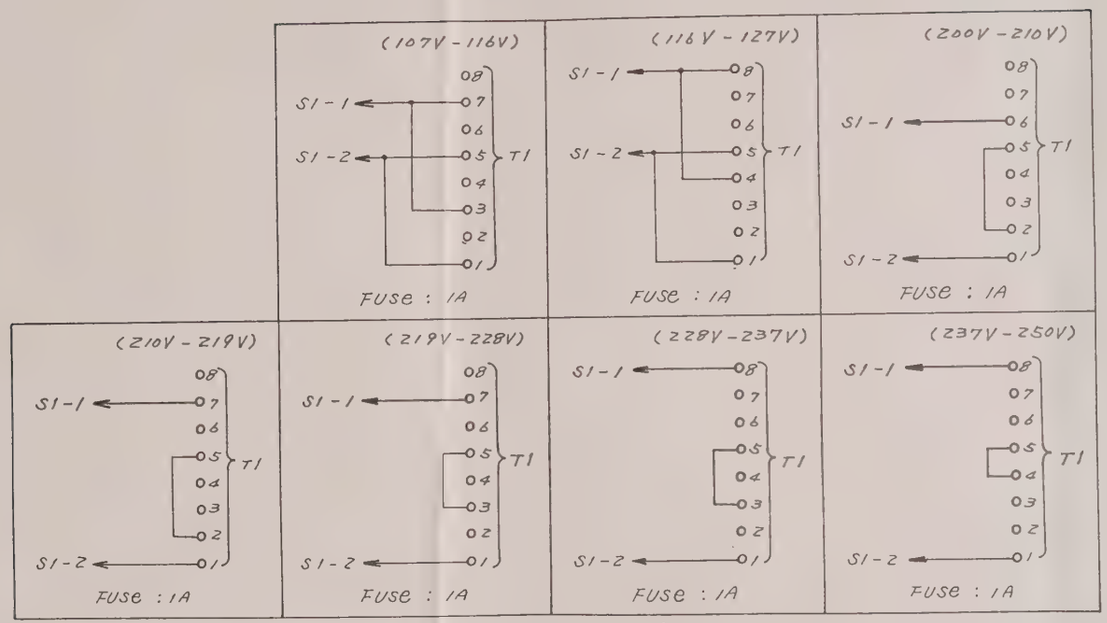


CIRCUIT DIAGRAM OF ME448B
RECEIVING UNIT

43W26577 (2/2)

6-71

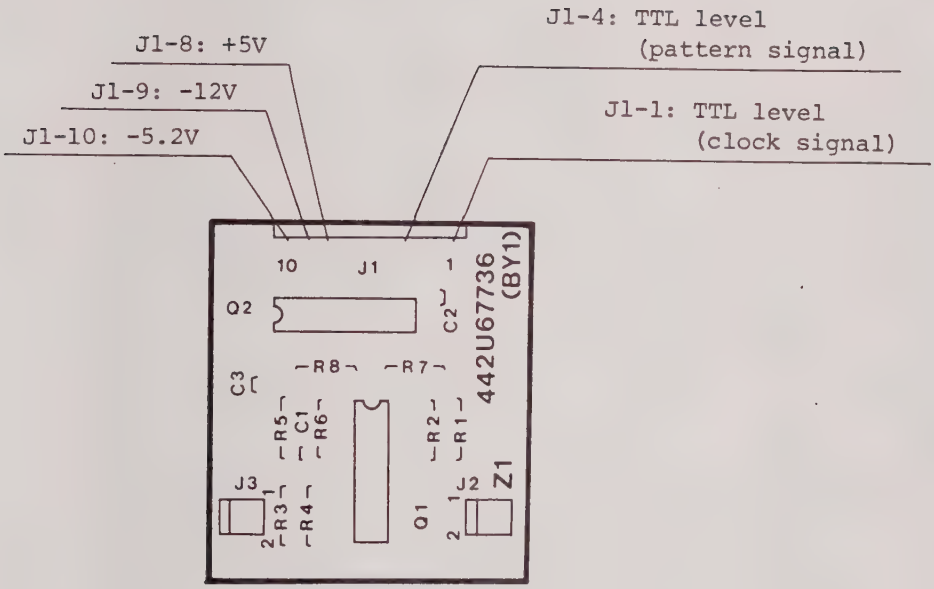


UNIPOLAR INPUT CIRCUIT (ECL) P.C. BOARD (442U67736)
COMPONENT LOCATION

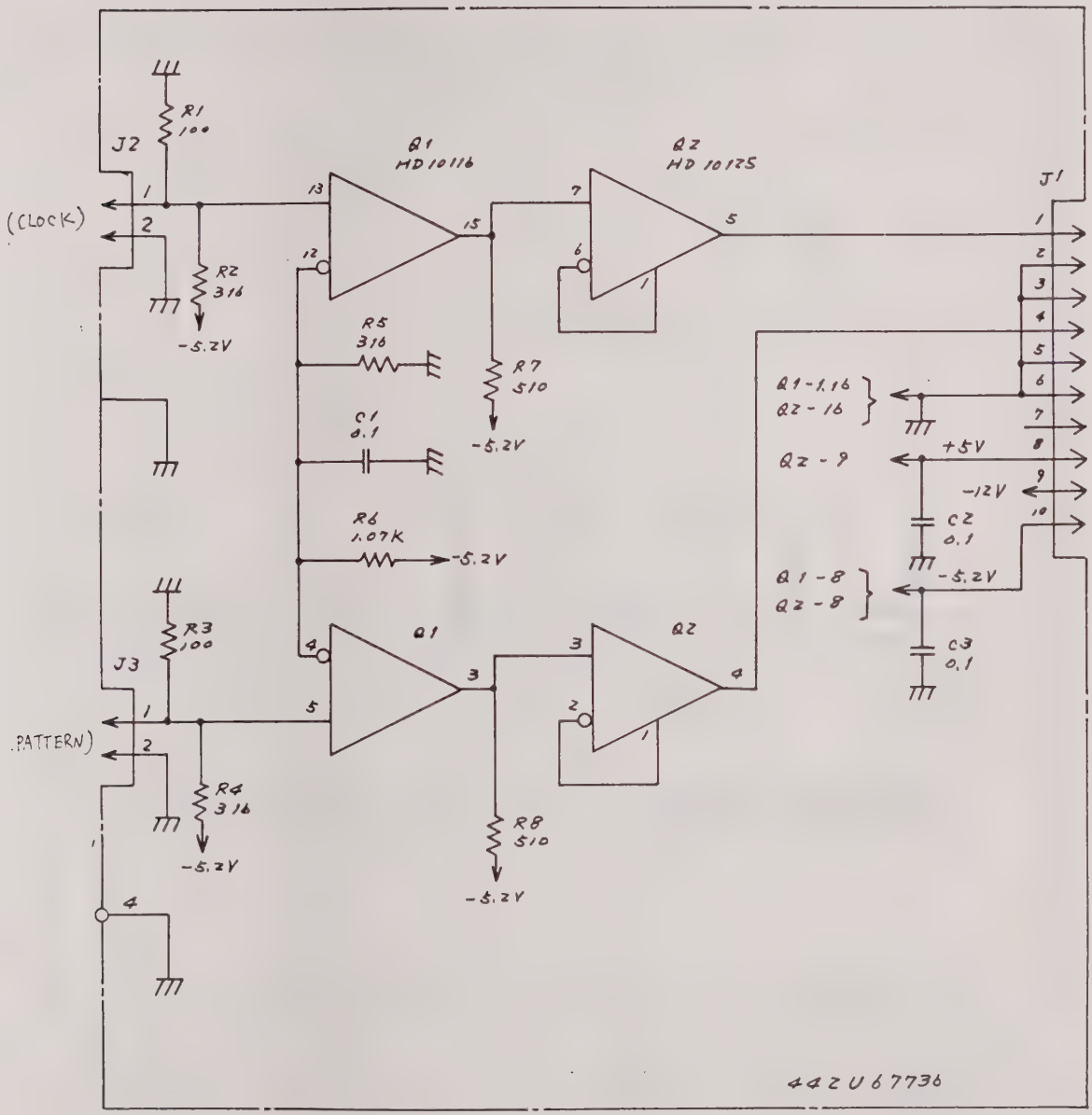


| Component list | 44W69557 |
|---|---|

CIRCUIT DIAGRAM OF UNIPOLAR
INPUT CIRCUIT (ECL)

44W69558

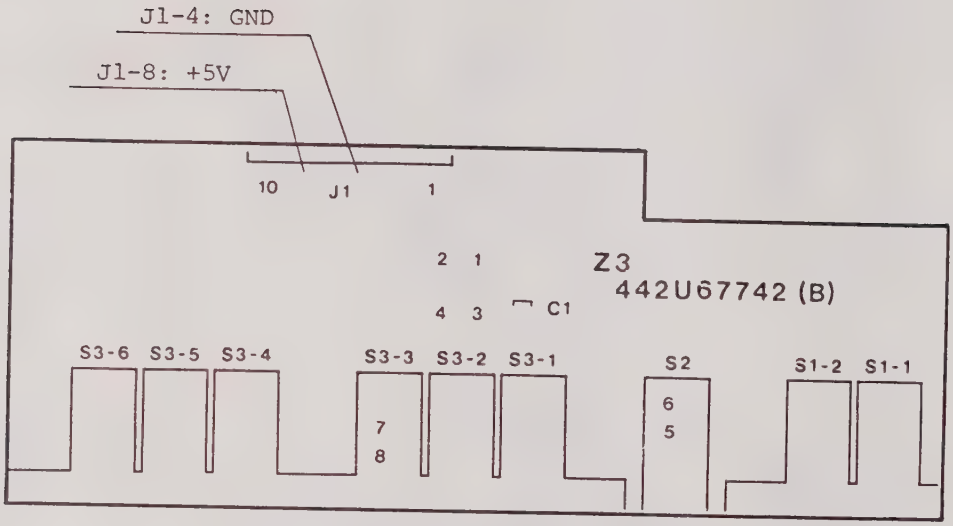


CODE SELECTION CIRCUIT (24CH) P.C. BOARD (442U67742)
COMPONENT LOCATION

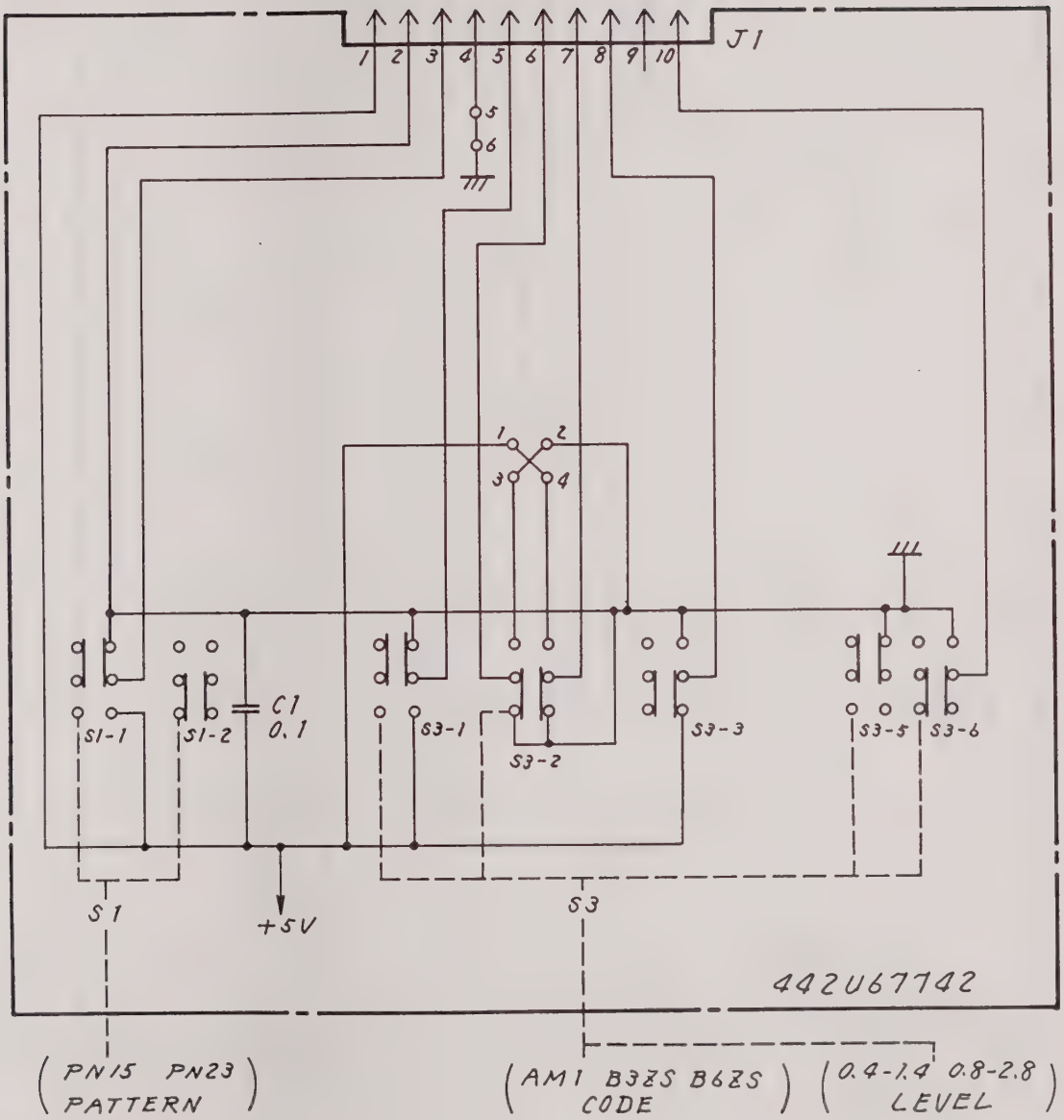


| Component list | 44W69820 |
|---|---|

CIRCUIT DIAGRAM OF CODE
SELECTION CIRCUIT (24CH)

44W69821

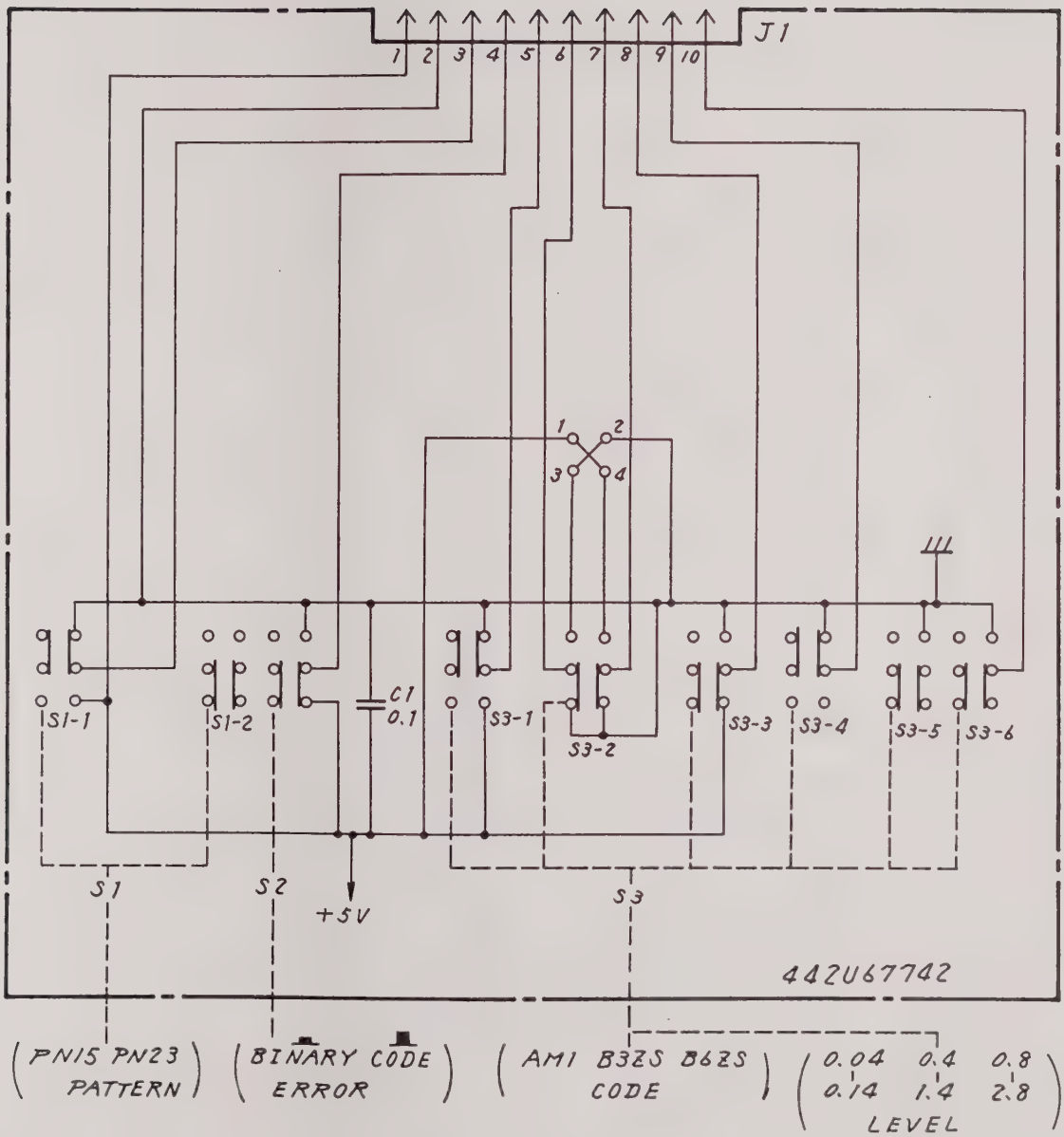


| Component list | 44W69822 |
|---|---|

CIRCUIT DIAGRAM OF
CODE SELECTION CIRCUIT
(24CH, OPT40)

44W69823

ERROR DETECTION CIRCUIT
P.C. BOARD (432U25519) COMPONENT LOCATION

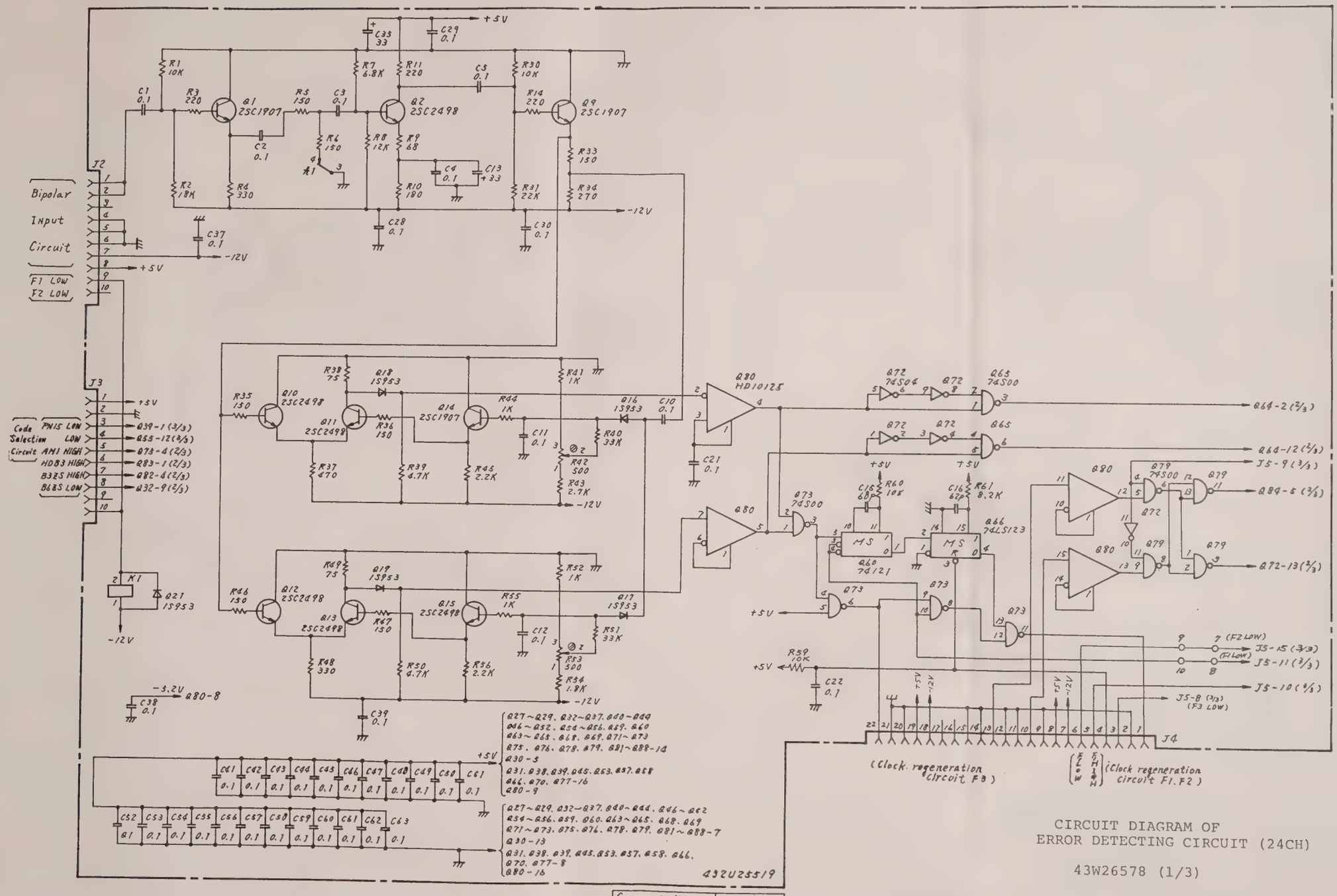


CIRCUIT DIAGRAM OF
ERROR DETECTING CIRCUIT (24CH)

43W26578 (1/3)

6-79/(6-80 blank)

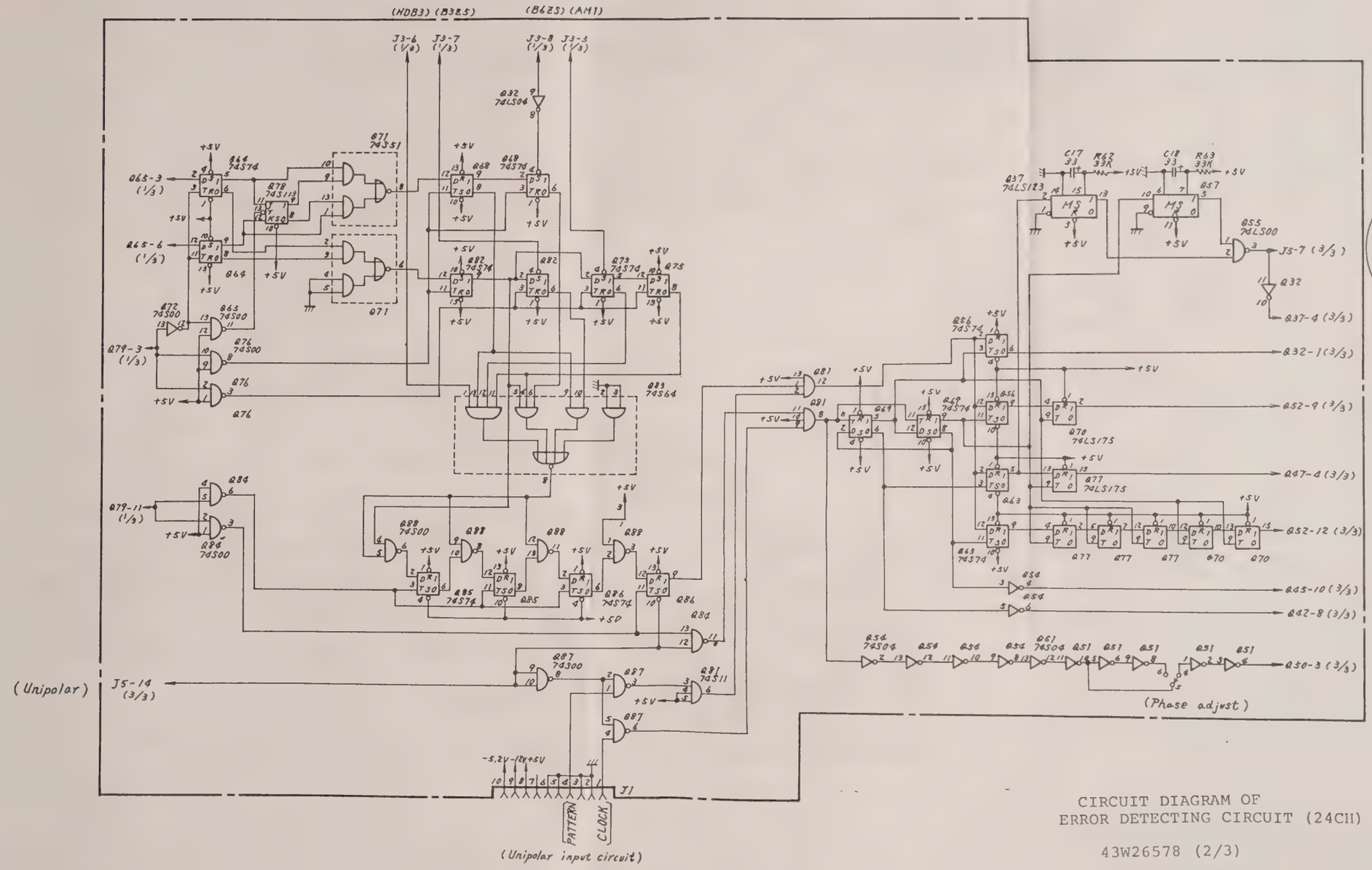


CIRCUIT DIAGRAM OF
ERROR DETECTING CIRCUIT (24CH)

43W26578 (2/3)

6-81/(6-82 blank)

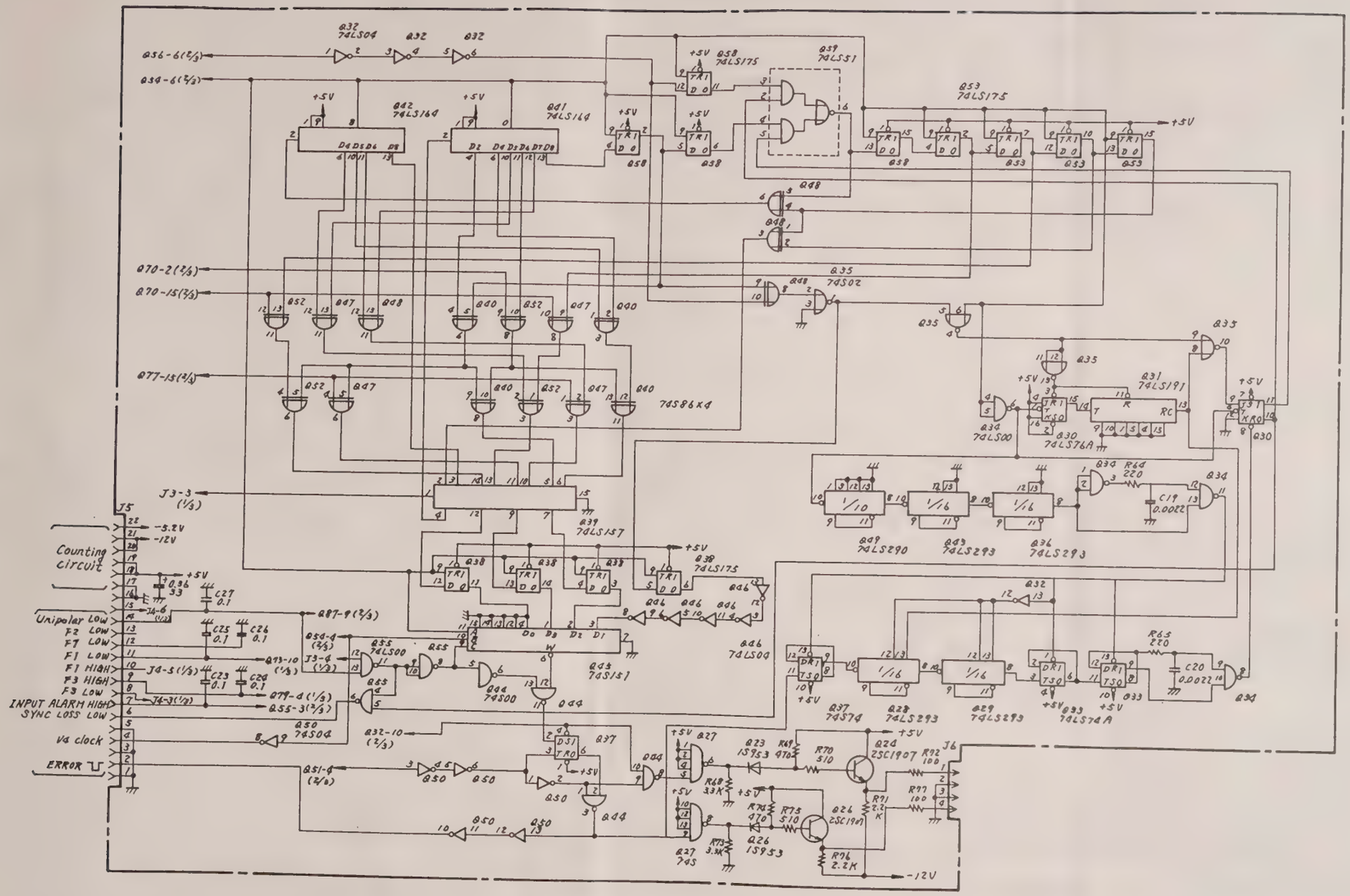


CIRCUIT DIAGRAM OF
ERROR DETECTING CIRCUIT (24CH)

43W26578 (3/3)

6-83/(6-84 blank)

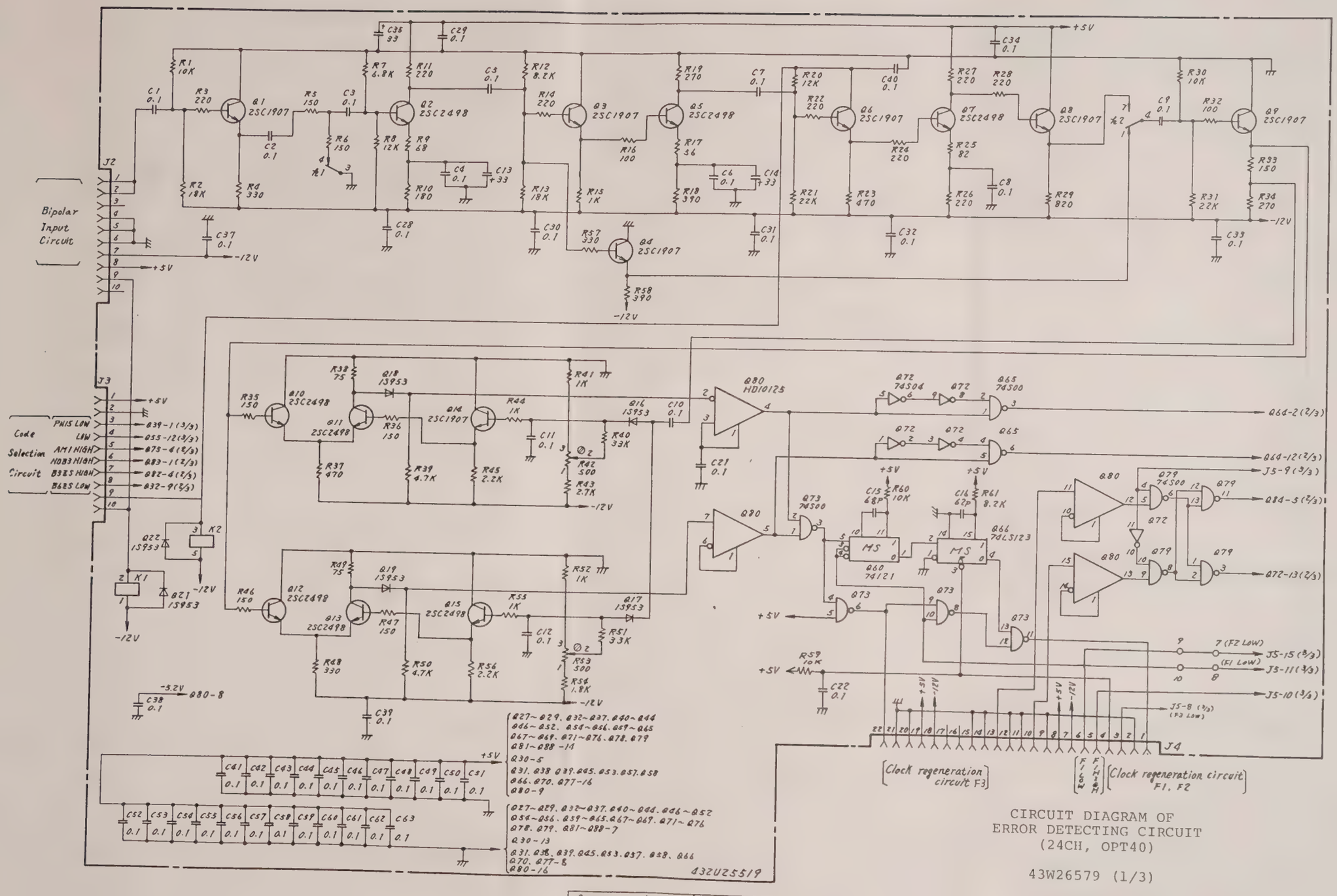


Component list | 44W69825

CIRCUIT DIAGRAM OF
ERROR DETECTING CIRCUIT
(24CH, OPT40)

43W26579 (1/3)

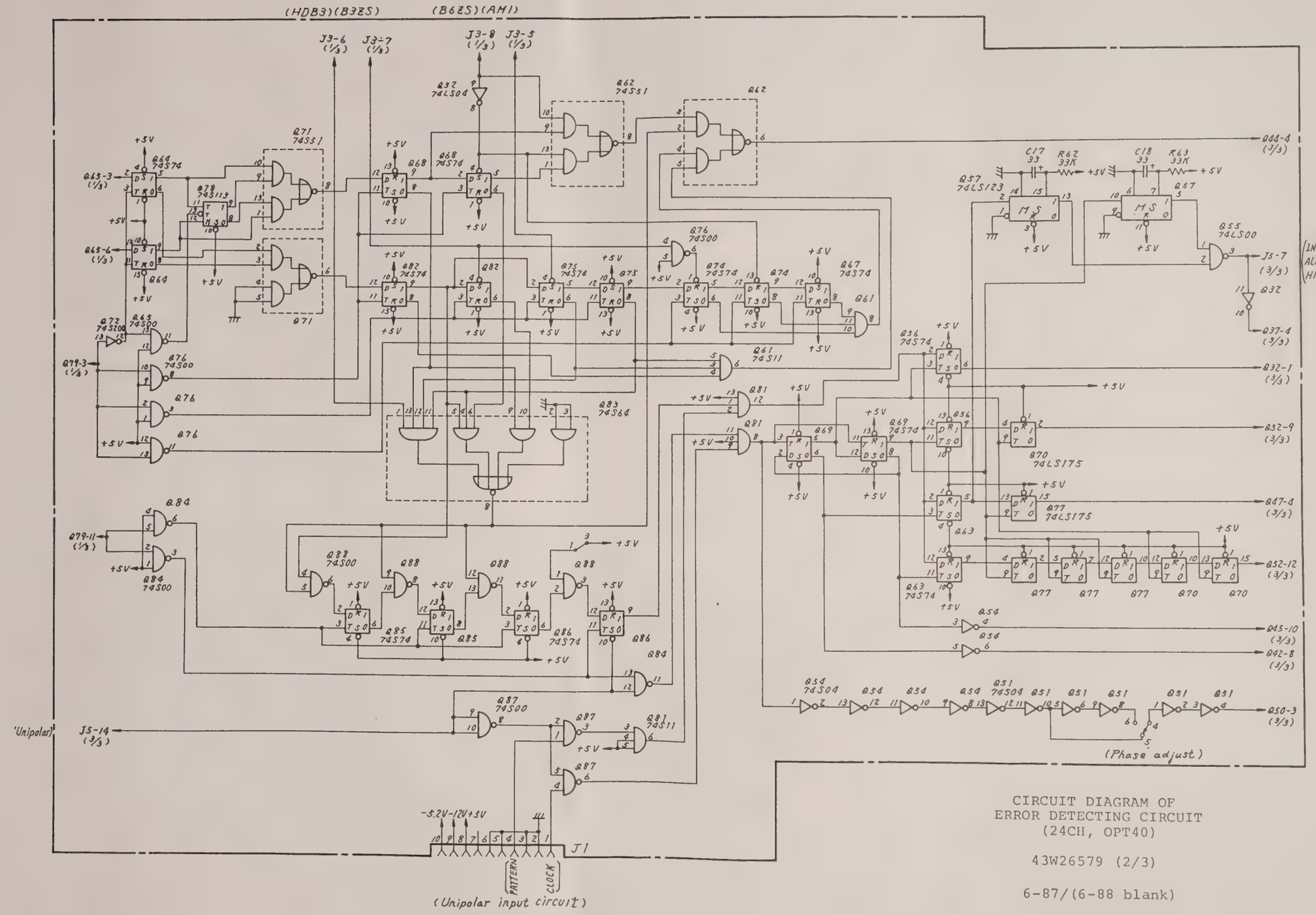


CIRCUIT DIAGRAM OF
ERROR DETECTING CIRCUIT
(24CH, OPT40)

43W26579 (2/3)

6-87/(6-88 blank)

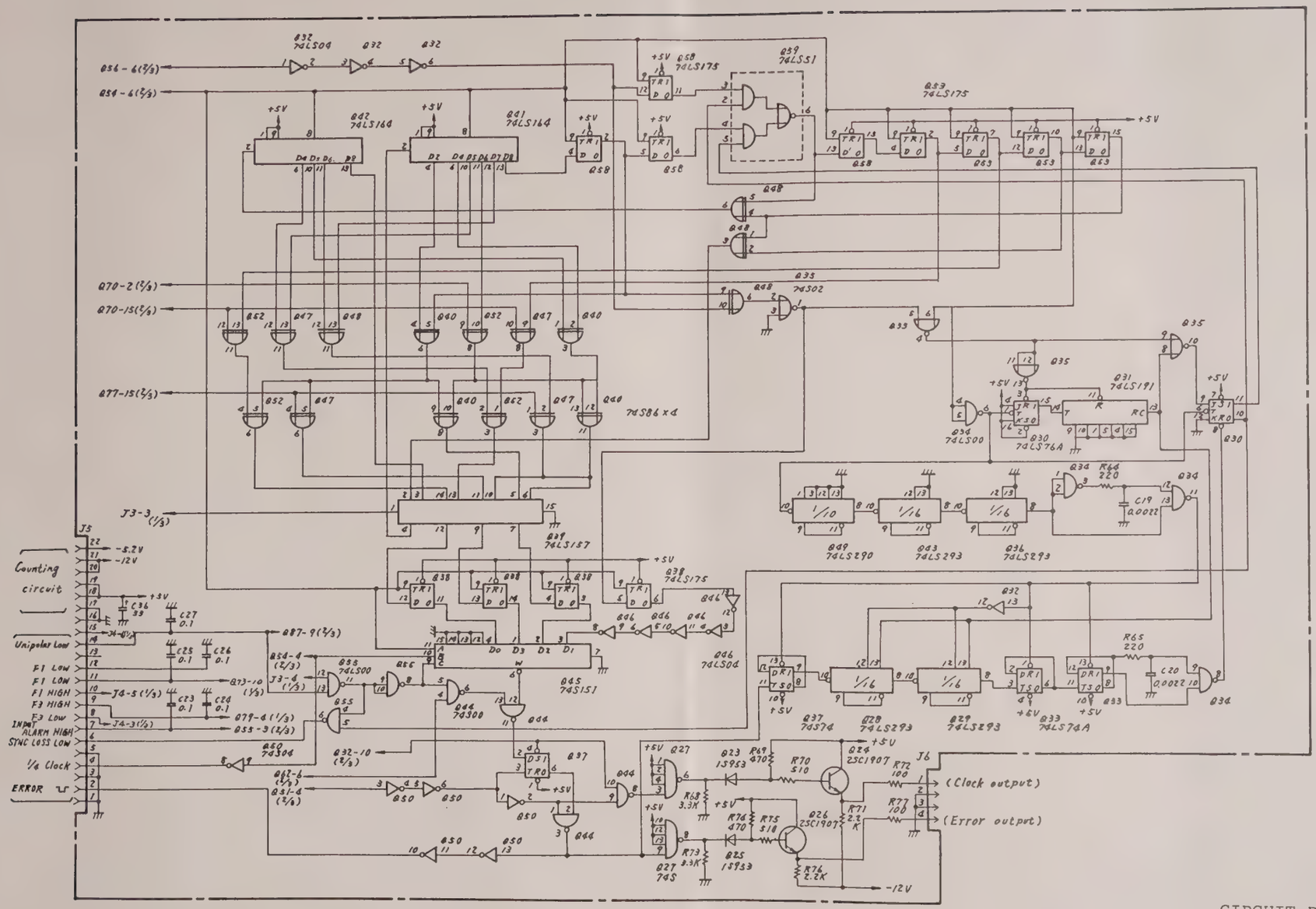


CIRCUIT DIAGRAM OF
ERROR DETECTING CIRCUIT
(24CH, OPT40)

43W26579 (3/3)

6-89/(6-90 blank)

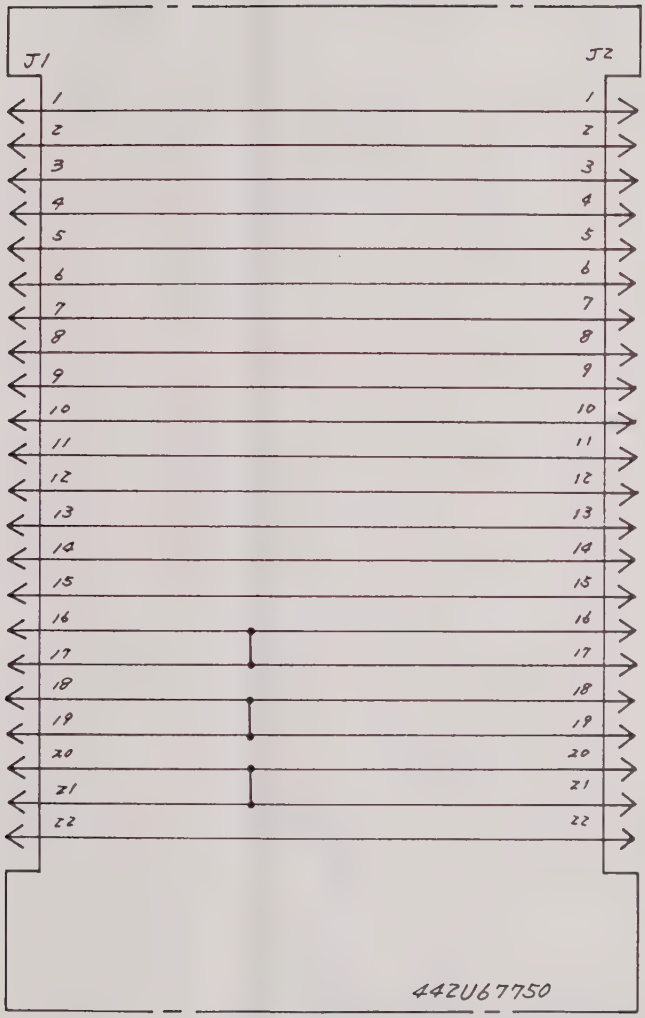


| Component list | 44W69565 |
|---|---|

CIRCUIT DIAGRAM OF
MOTHER BOARD CIRCUIT

44W69566

6-91

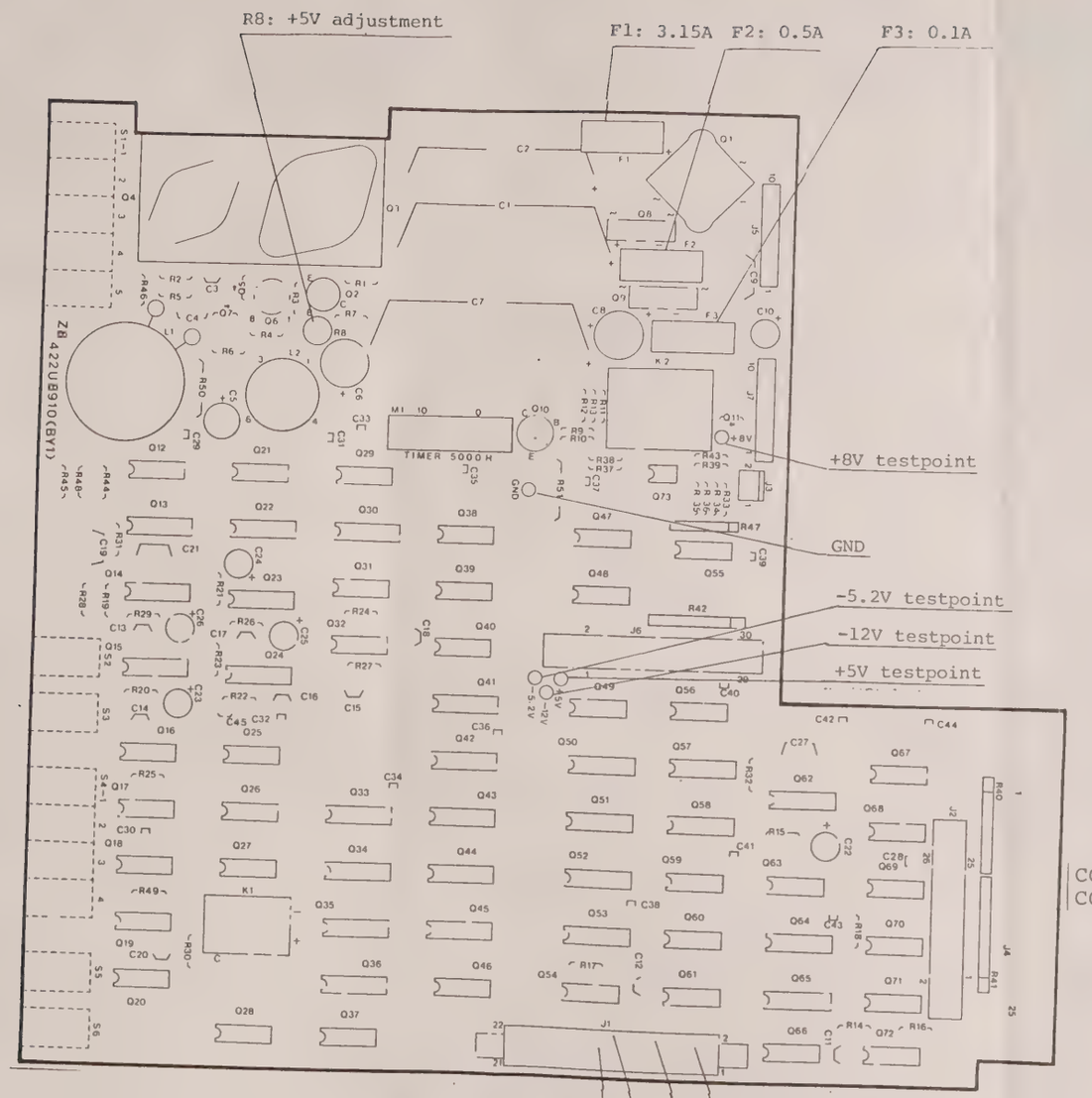


COUNTING CIRCUIT P.C. BOARD (442U8910)
COMPONENT LOCATION

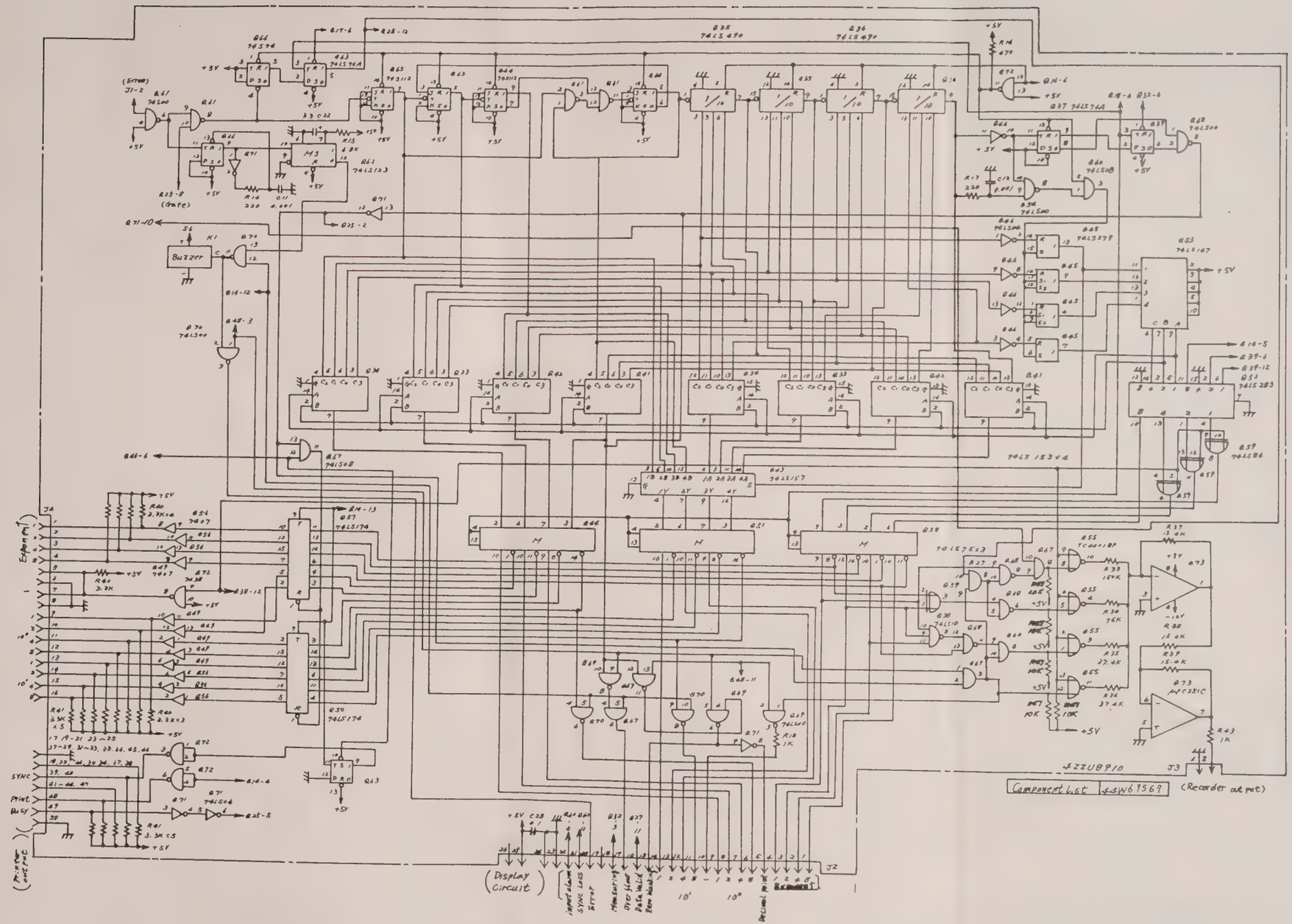


CIRCUIT DIAGRAM OF
COUNTING CIRCUIT

43W26417 (1/3)

6-93/(6-94 blank)

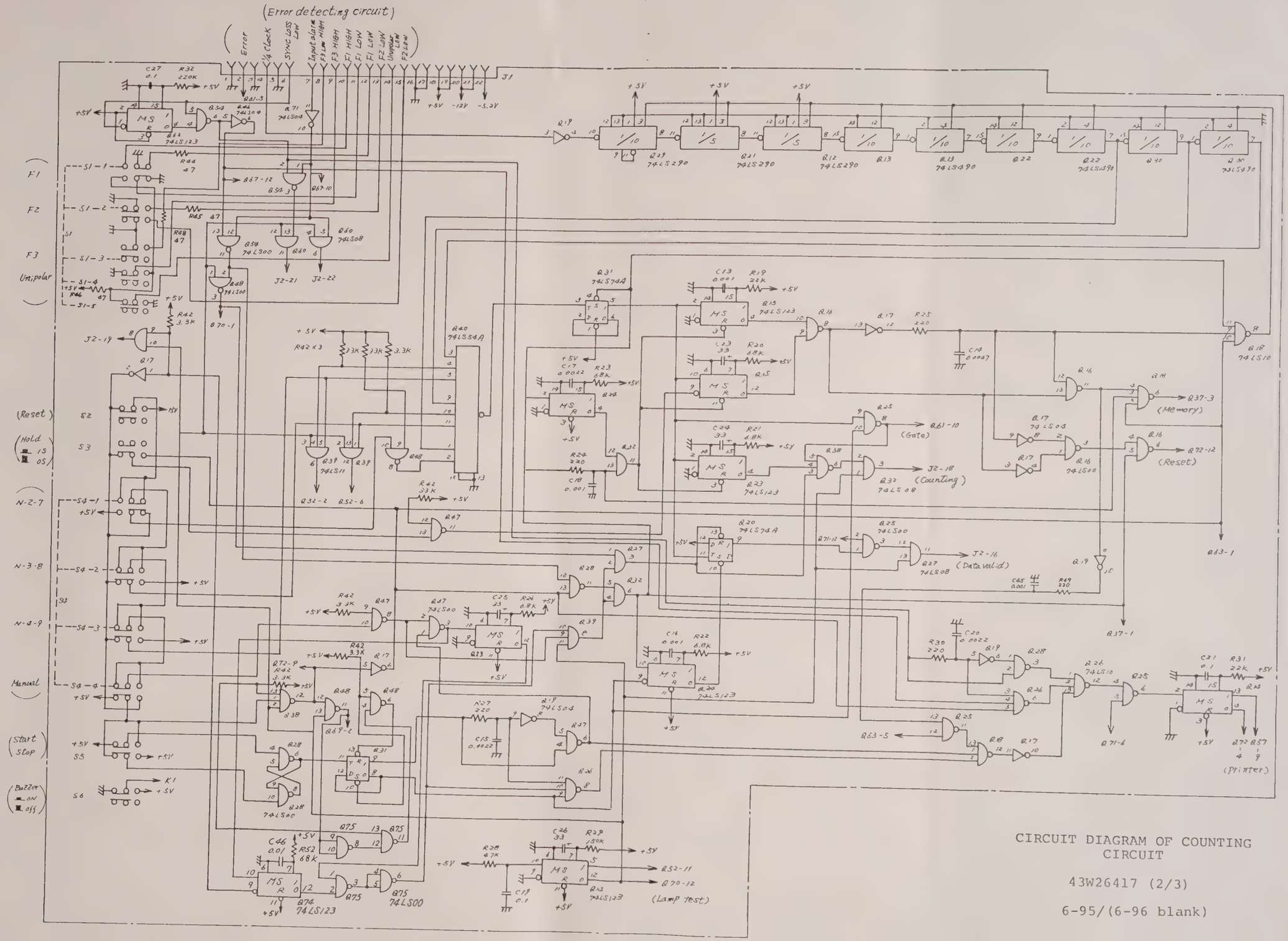
(Error detecting circuit)
Error
¼ clock
SYNC LOSS Low
Input alarm High
F3 Low HIGH
F3 HIGH
F1 HIGH
F1 LOW
F1 LOW
F2 LOW
Unipolar LOW
F2 LOW
J1
+5V
-12V
-5.2V
F1
F2
F3
Unipolar
S1
(Reset)
(Hold is off)
S2
S3
N-2-7
N-3-8
N-4-9
S4
Manual
(Start Stop)
S5
(Buzzer ON off)
S6
K1
(Gate)
(Counting)
(Memory)
(Reset)
(Data valid)
(Printer)
(Lamp test)
J2-18
J2-16
J2-21
J2-22
CIRCUIT DIAGRAM OF COUNTING CIRCUIT
43W26417 (2/3)
6-95/(6-96 blank)

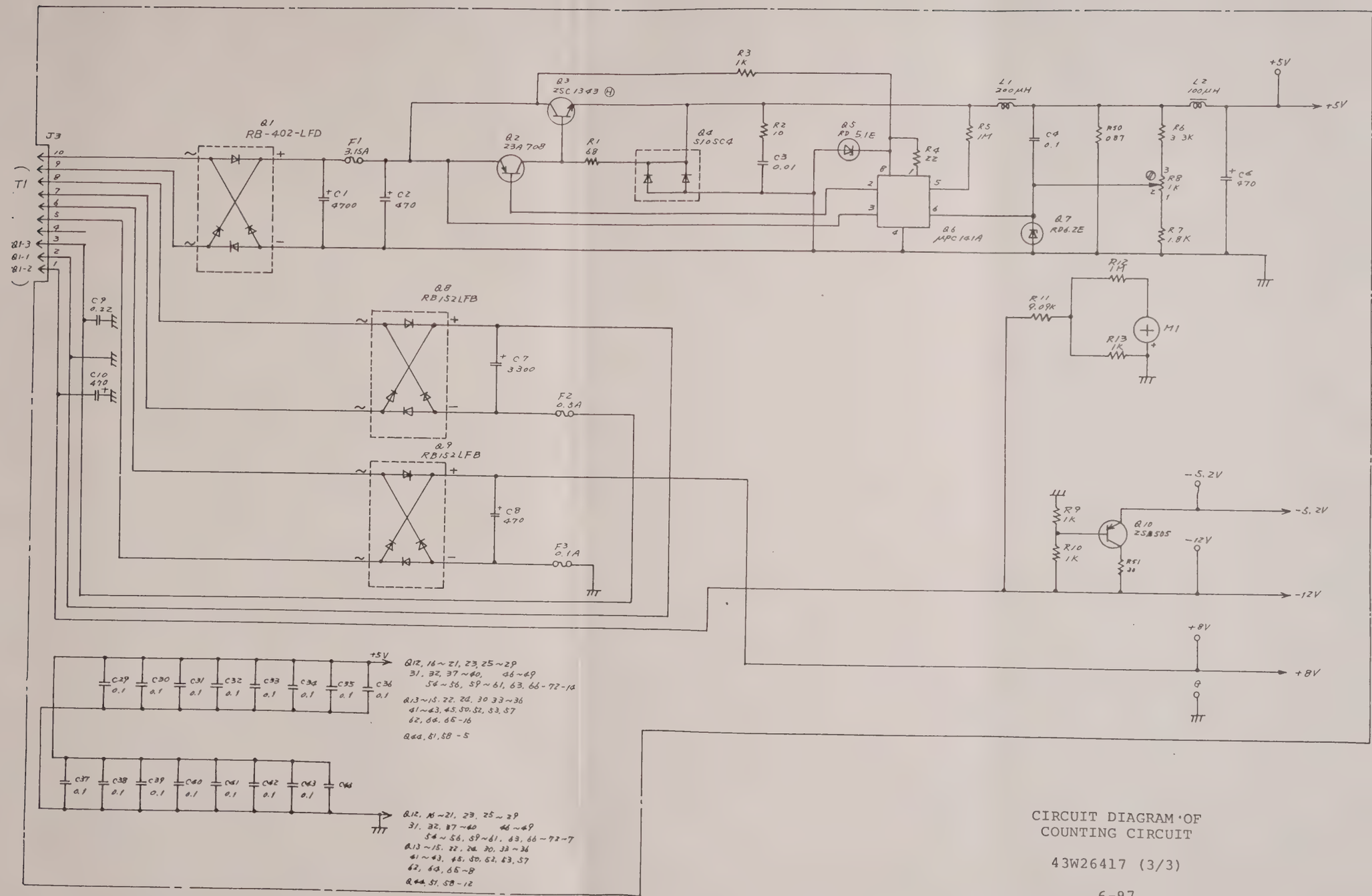


CIRCUIT DIAGRAM OF
COUNTING CIRCUIT

43W26417 (3/3)

6-97

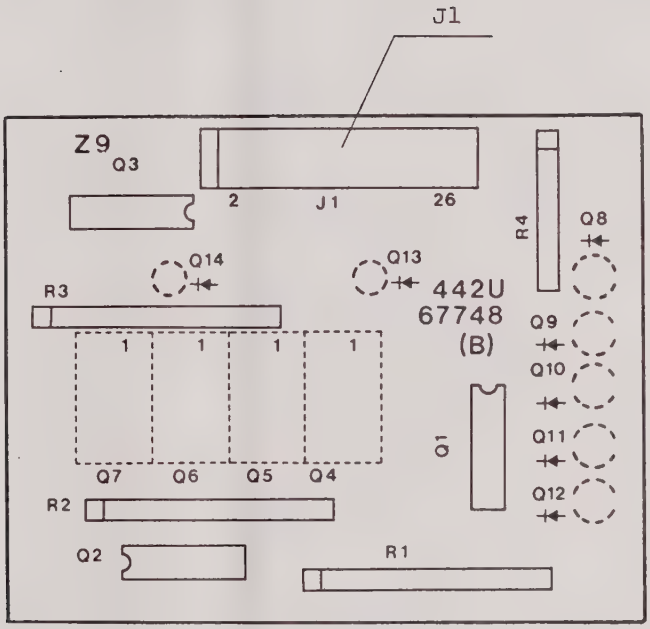


DISPLAY CIRCUIT (442U67748) COMPONENT LOCATION

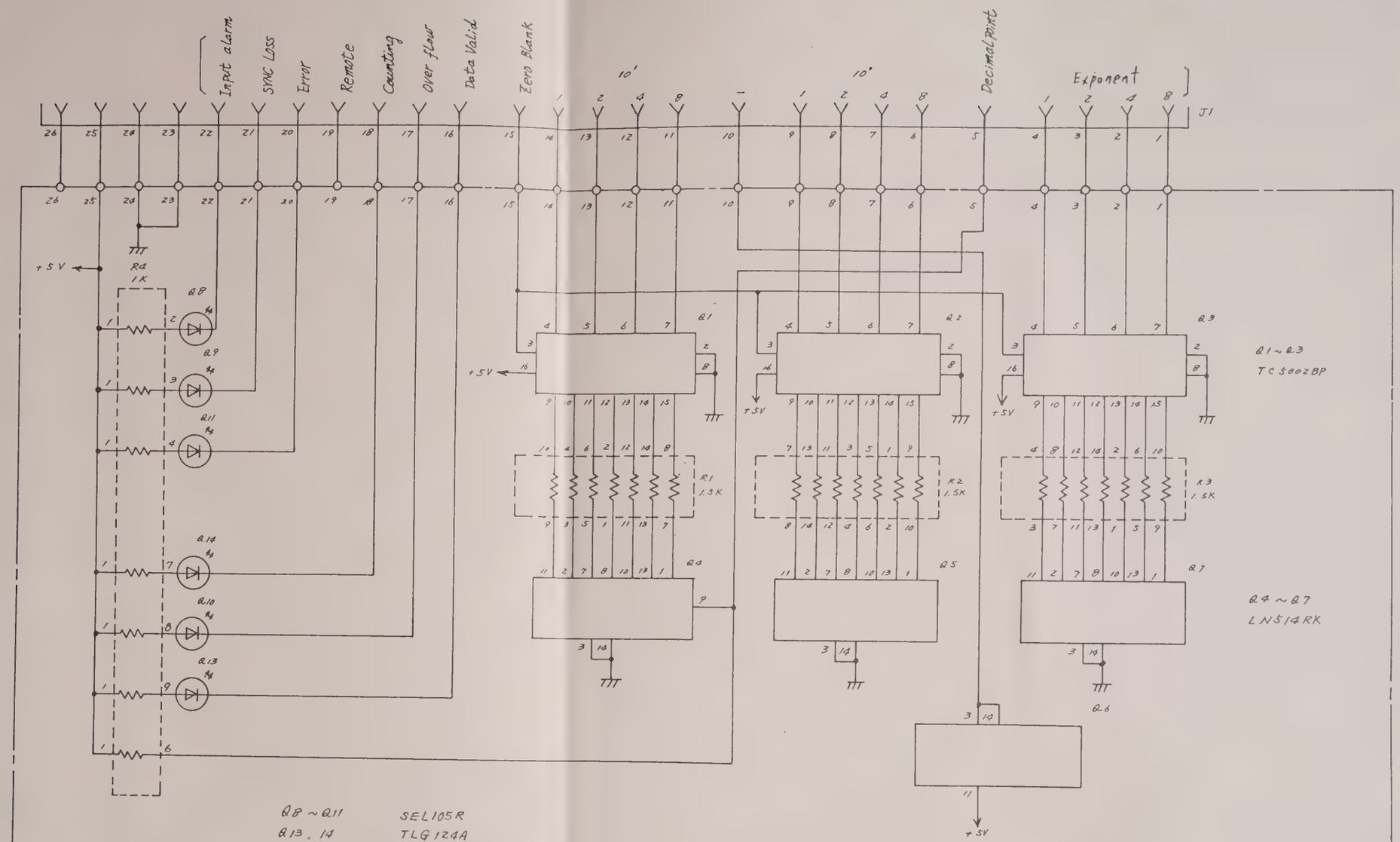


( Q4 Q5 Q6 Q7 )

CIRCUIT DIAGRAM OF
DISPLAY CIRCUIT

43W26418

6-99

Component List 44W69568

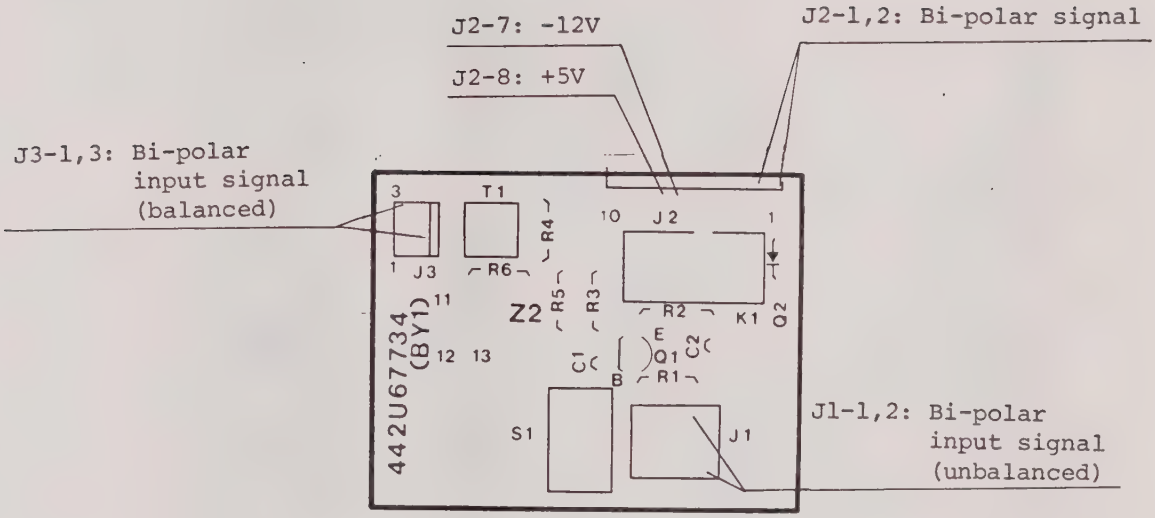


BIPOLAR INPUT CIRCUIT (24CH, OPT22) P.C. BOARD (442U67734)
COMPONENT LOCATION

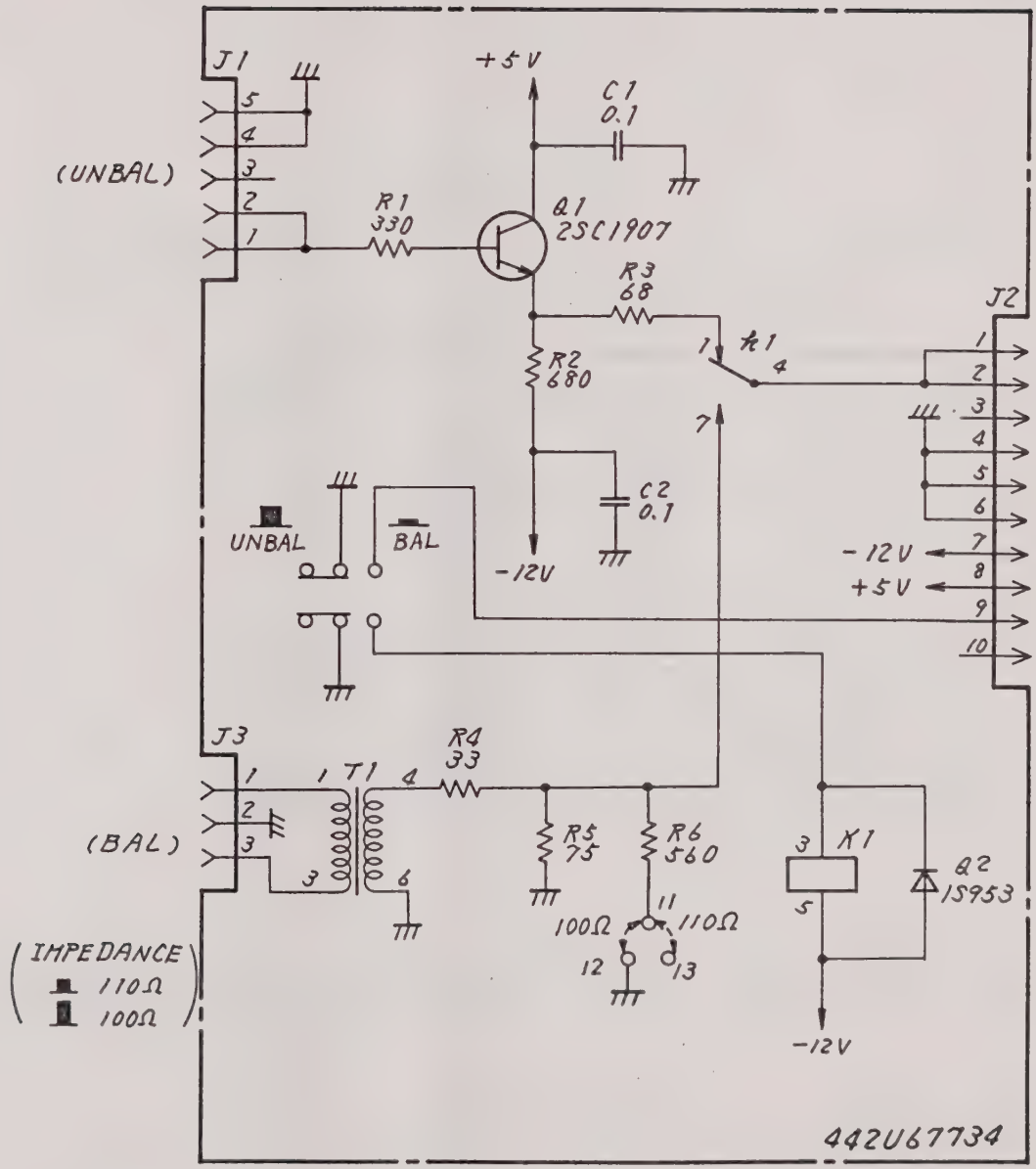


| Component list | 44W69826 |
|---|---|

CIRCUIT DIAGRAM OF
BIPOLAR INPUT CIRCUIT
(24CH, OPT22)

44W69827

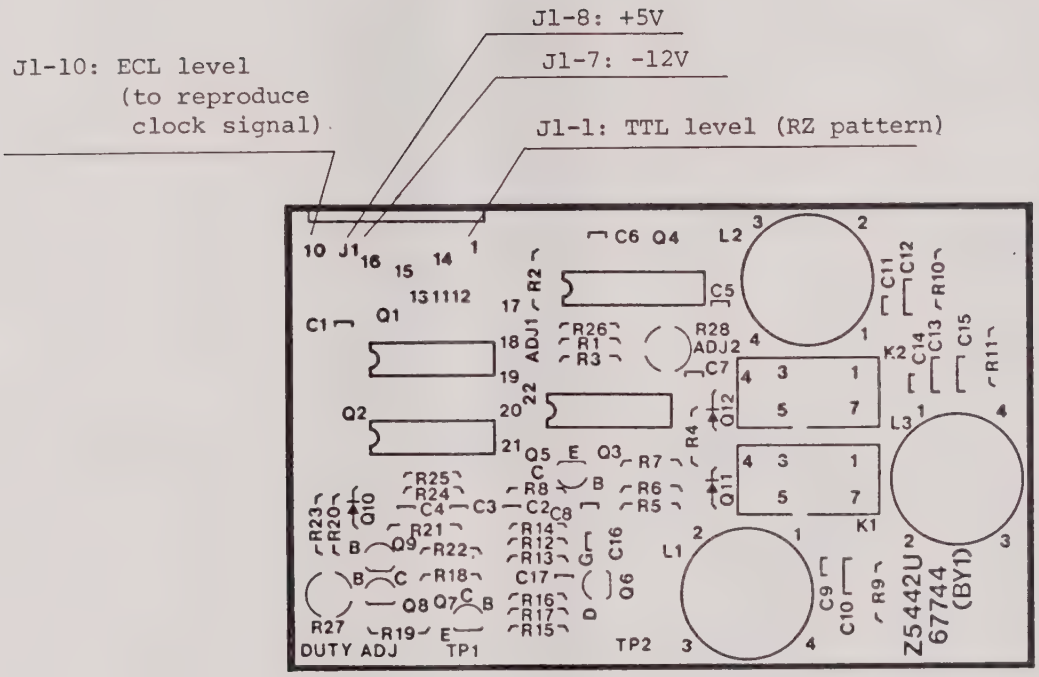


CLOCK REGENERATING CIRCUIT (24CH, F1) P.C. BOARD (442U67744)
COMPONENT LOCATION

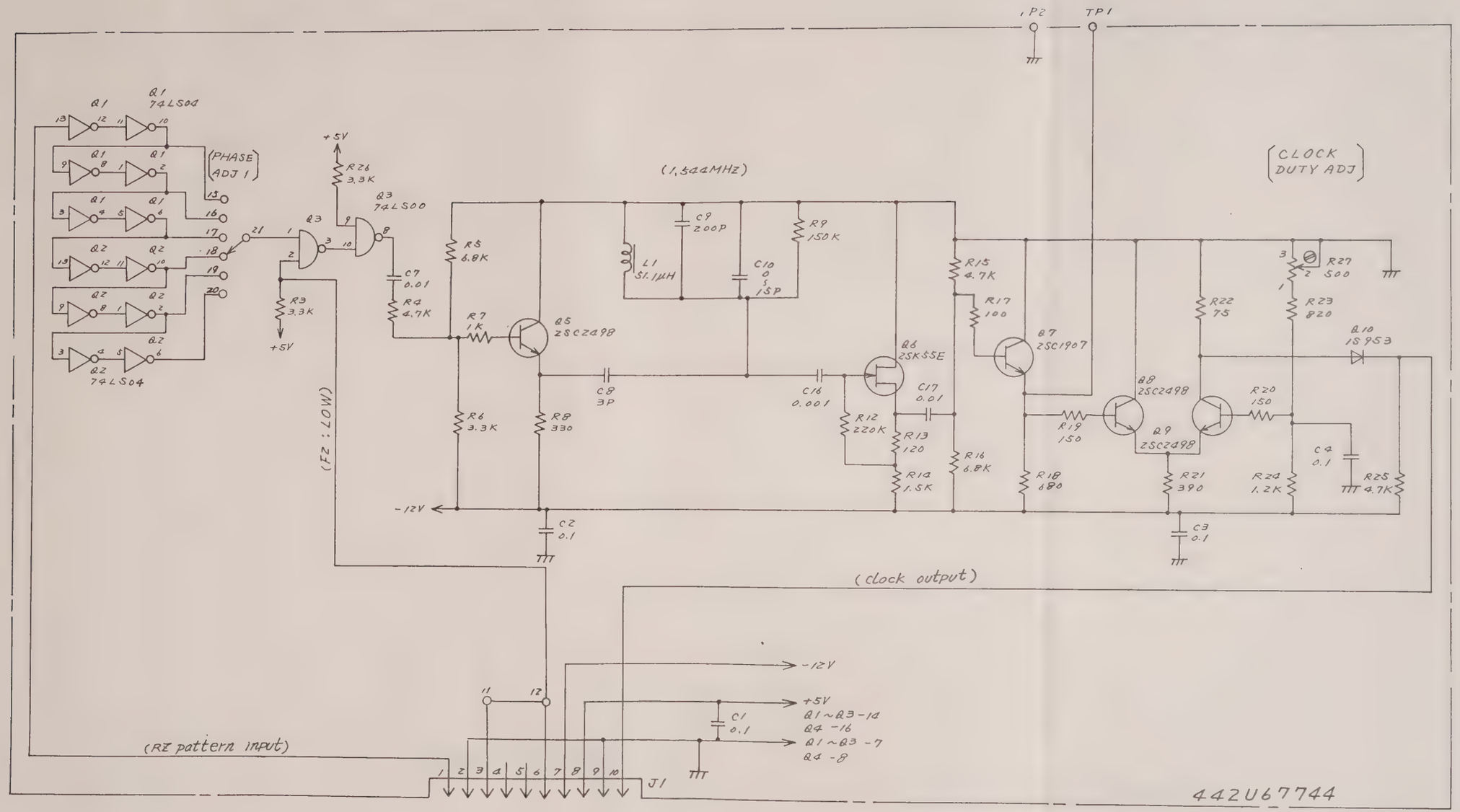


CIRCUIT DIAGRAM OF
CLOCK REGENERATION CIRCUIT
(24CH, F1)

43W26580

Component List 44W69828

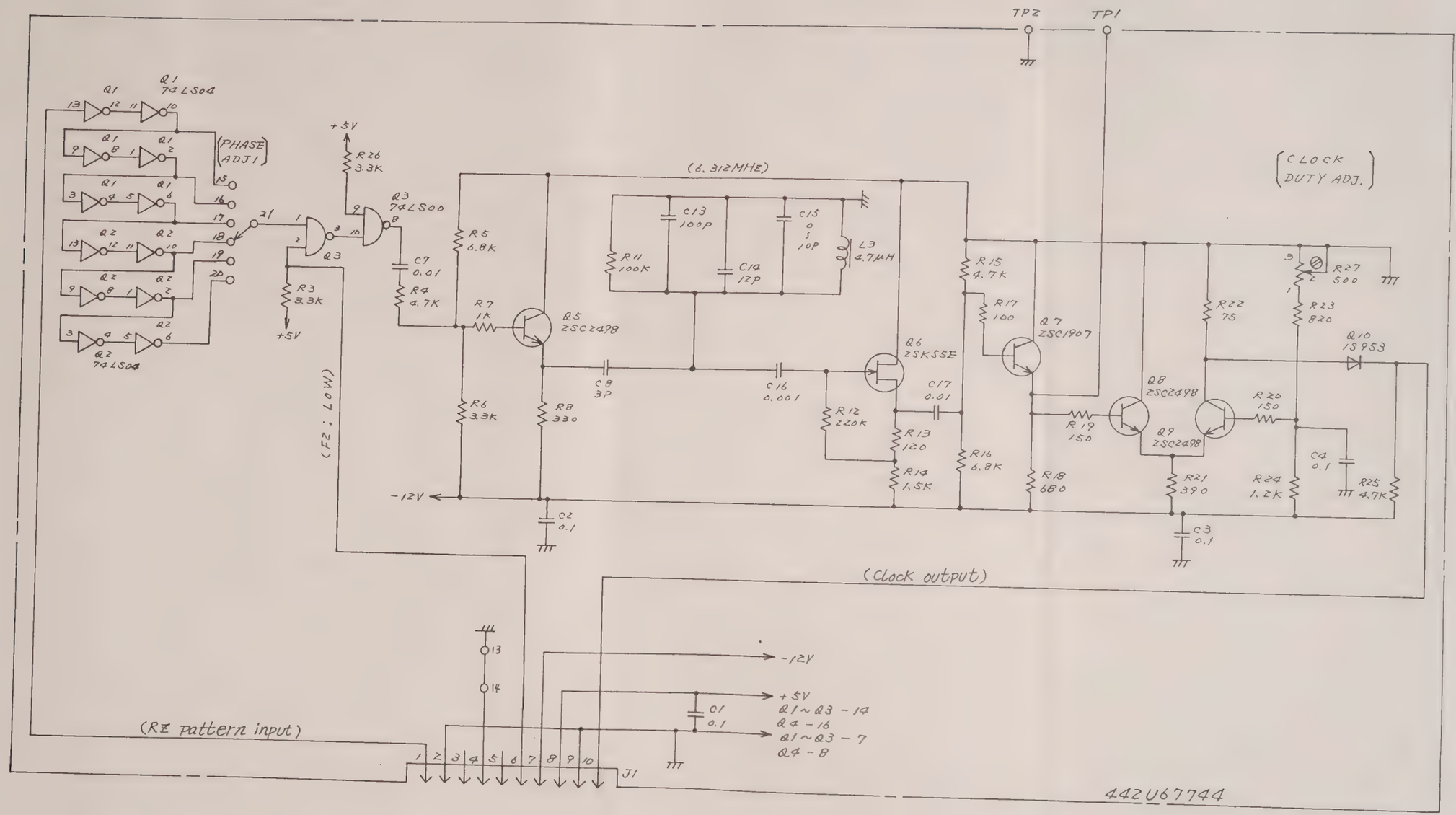


CIRCUIT DIAGRAM OF
CLOCK REGENERATION CIRCUIT
(24CH, F2)

43W26581

Component List 44W69829

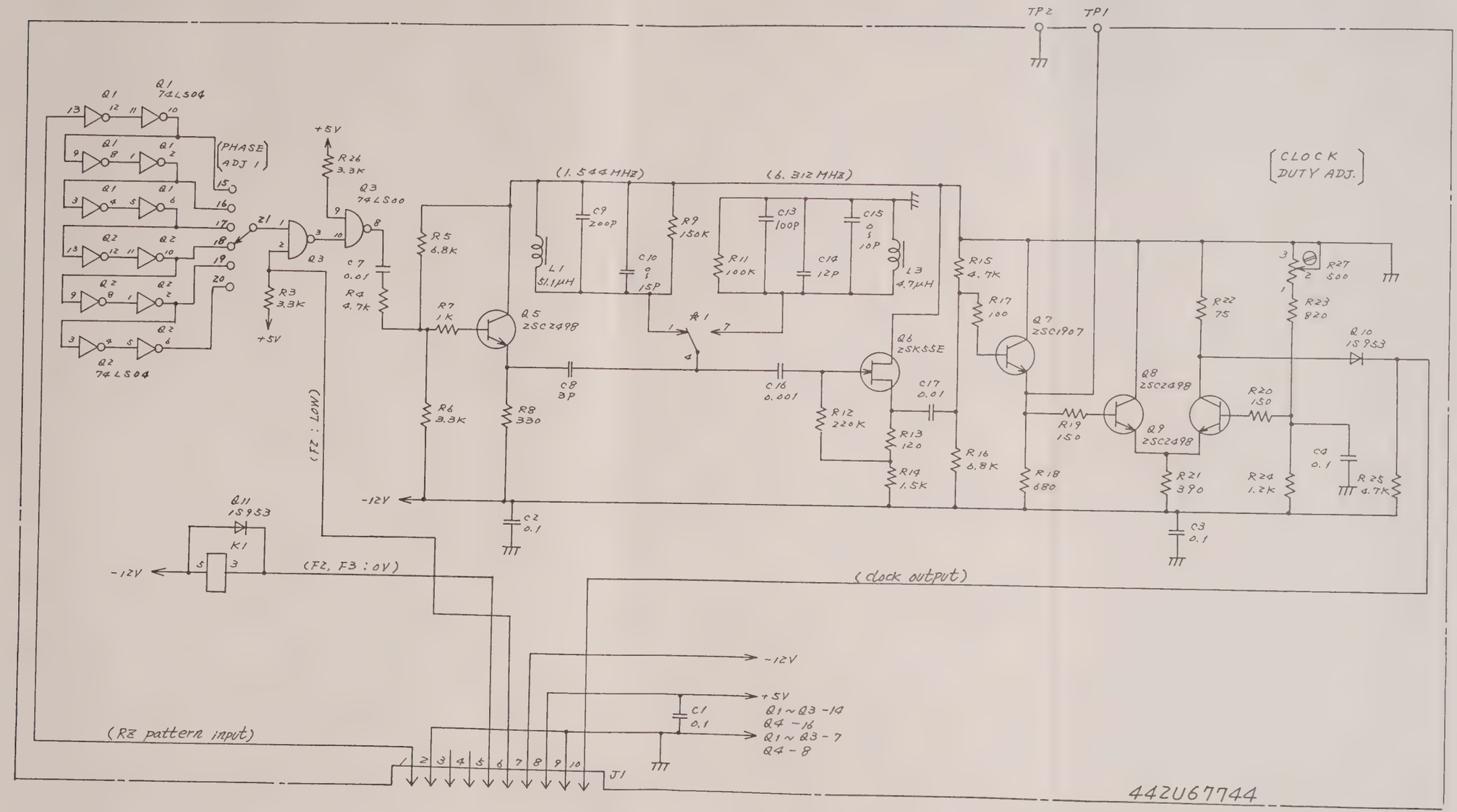


CIRCUIT DIAGRAM OF
CLOCK REGENERATION CIRCUIT
(24CH, F1, F3)

43W26582

Component List 44W69830

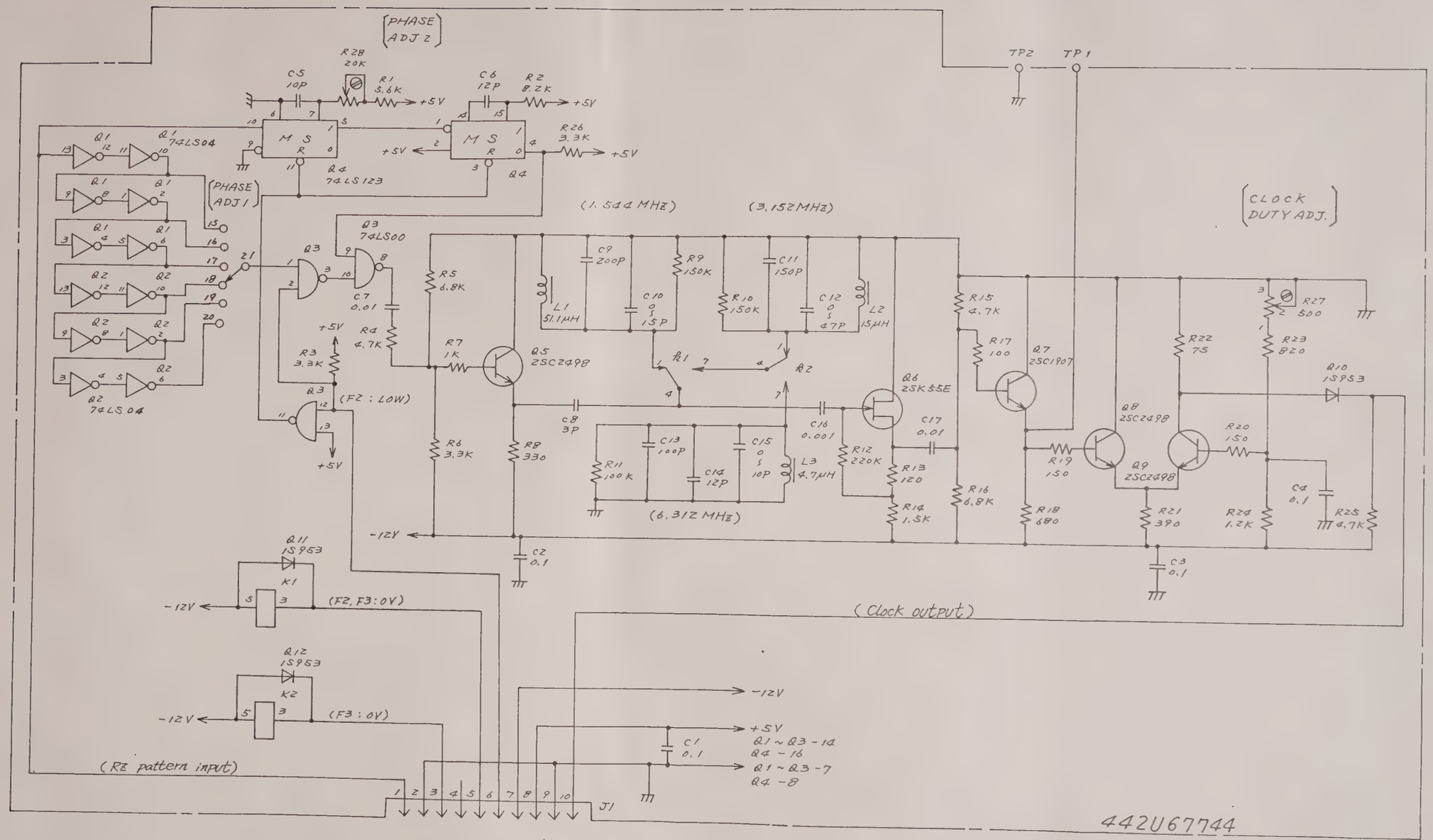


CIRCUIT DIAGRAM OF CLOCK
REGENERATING CIRCUIT (24CH,F1,F2,F3)

43W26943

Component list 44W70817

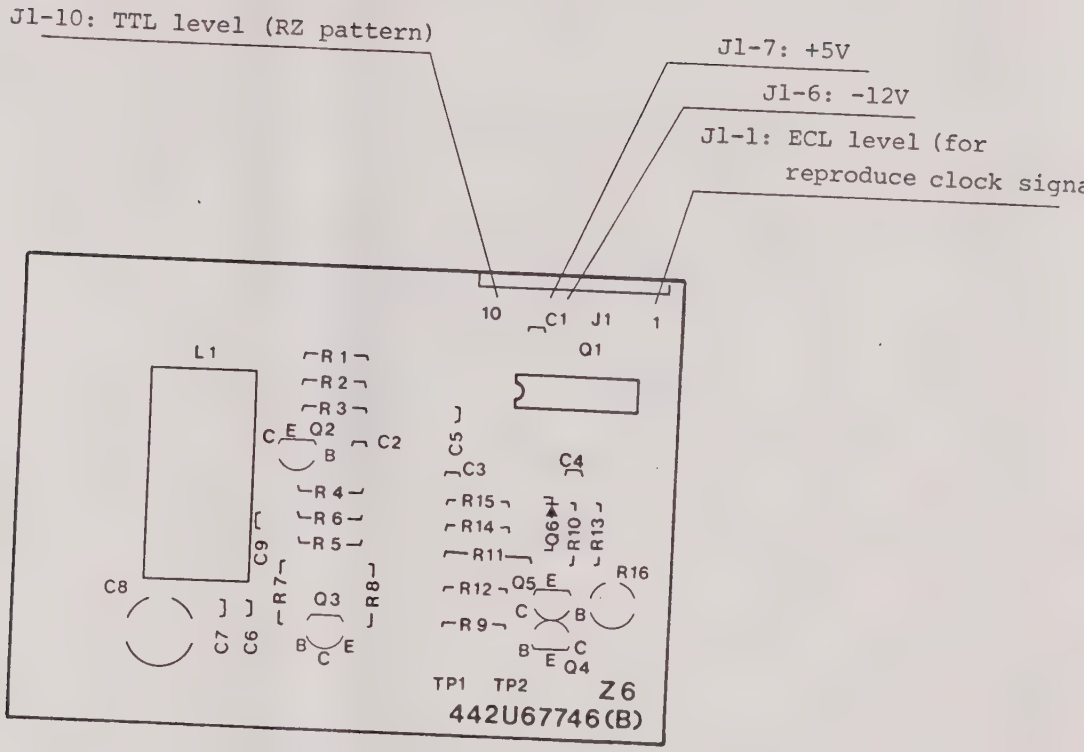


CLOCK REGENERATING CIRCUIT (24CH, F4) P.C. BOARD (442U67746)
COMPONENT LOCATION

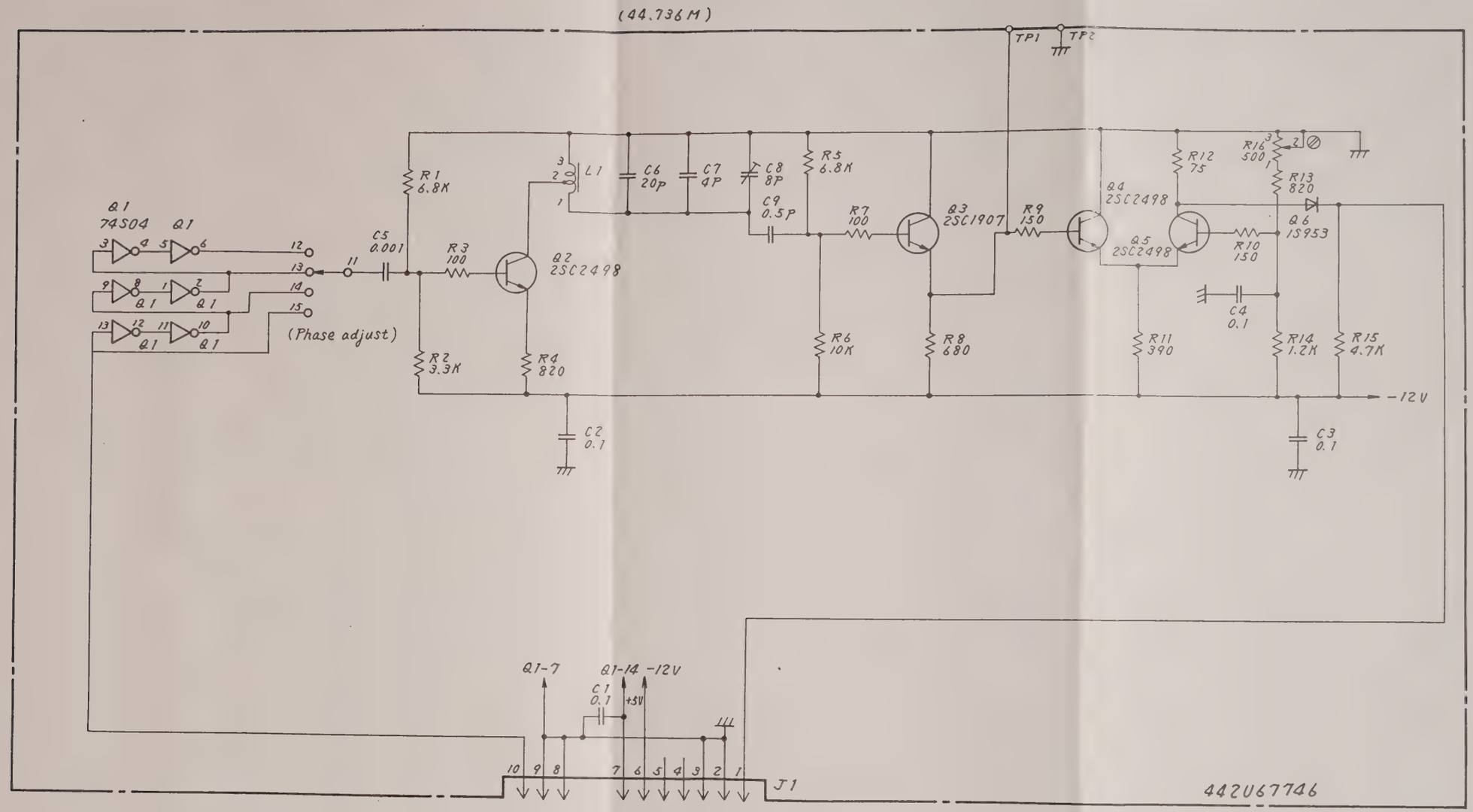


| Component list | 44W69831 |
|---|---|

CIRCUIT DIAGRAM OF
CLOCK REGENERATION CIRCUIT
(24CH, F4)

43W26583

6-111

117

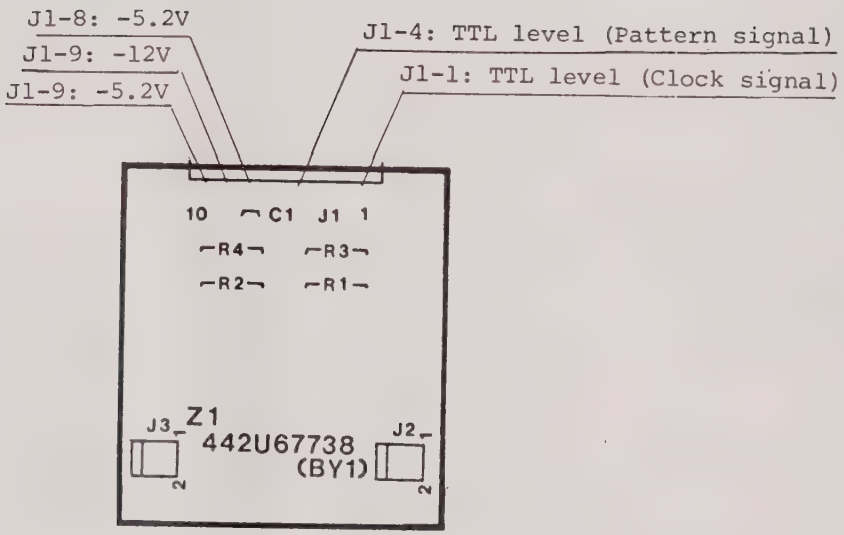


UNIPOLAR INPUT CIRCUIT (0/+2V, OPT31) P.C. BOARD (442U67738) COMPONENT LOCATION

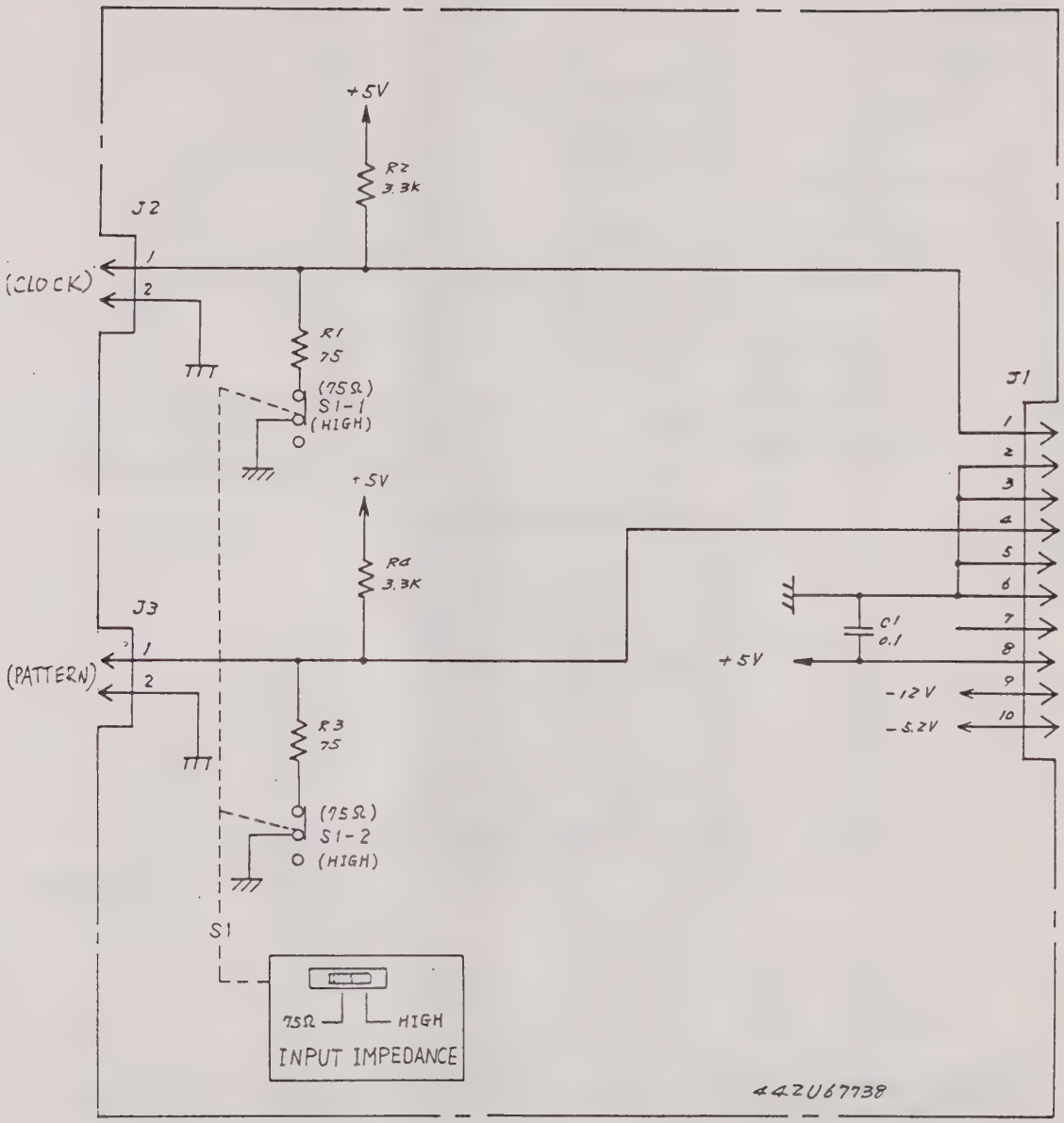


| Component List | 44W69575 |
|---|---|

CIRCUIT DIAGRAM OF UNIPOLAR
INPUT CIRCUIT (0/+2V OPT31)

44W69576

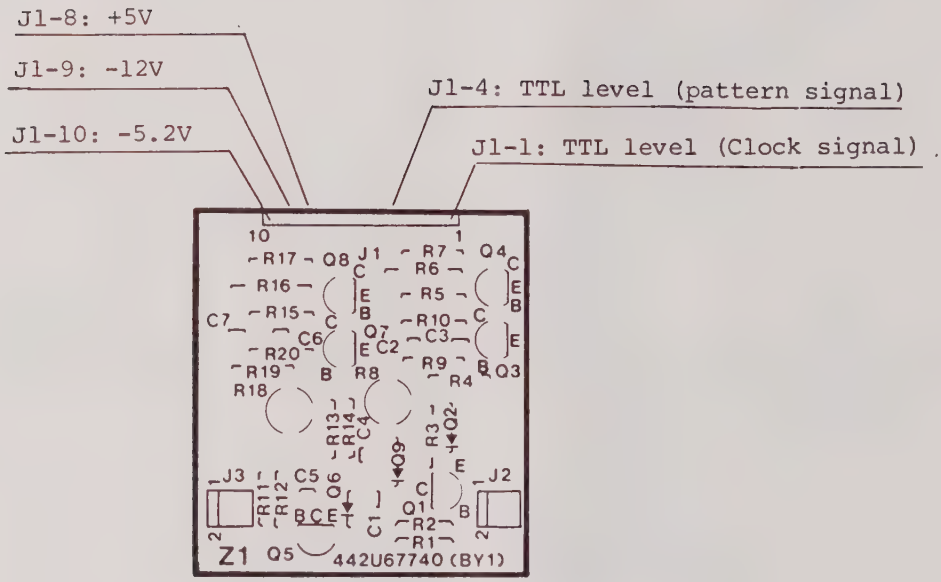


UNIPOLAR INPUT CIRCUIT (0/+3V, OPT32) P.C. BOARD (442U67740)
COMPONENT LOCATION

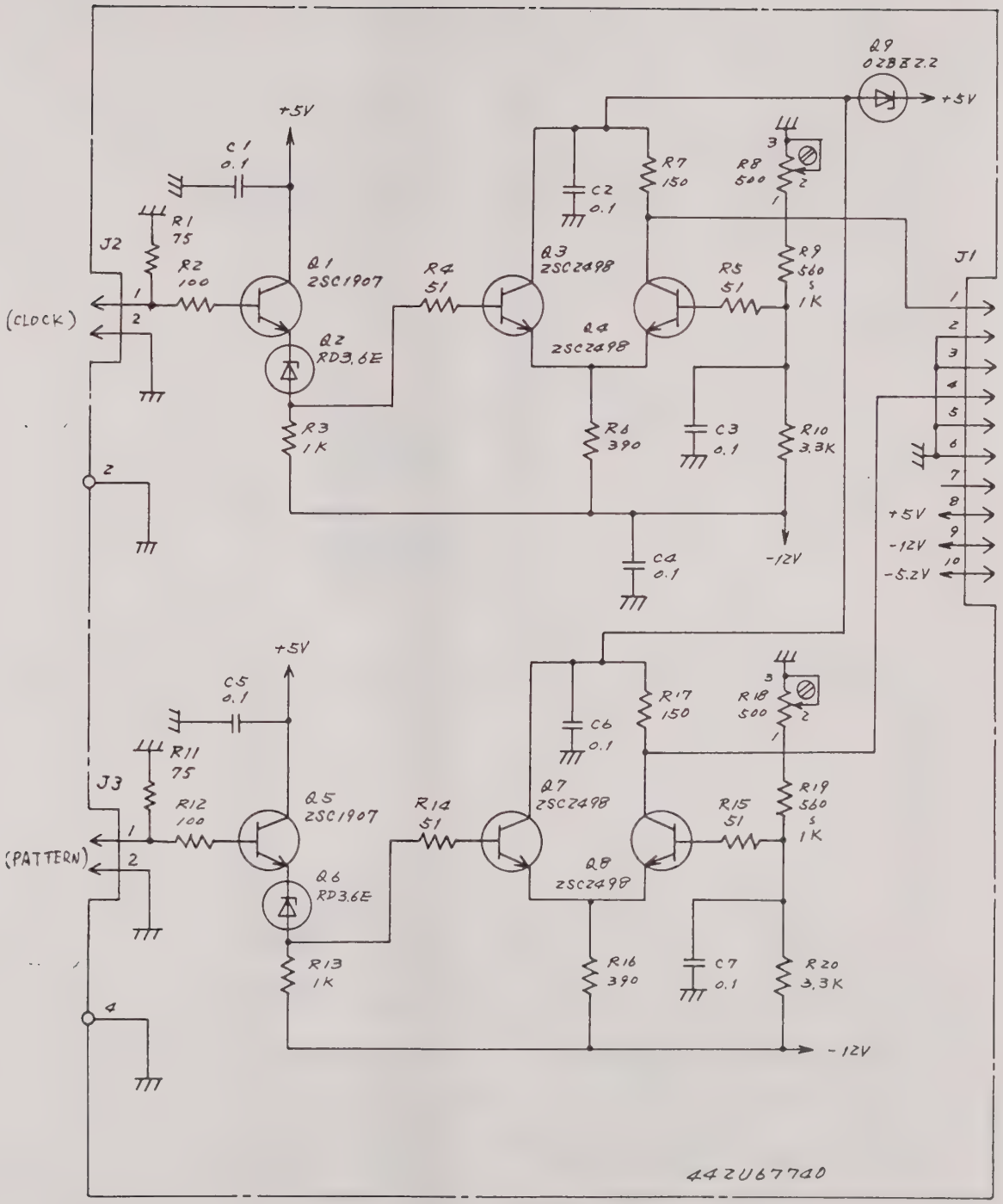


| Component List | 44W69577 |
|---|---|

CIRCUIT DIAGRAM OF UNIPOLAR INPUT CIRCUIT (0/+3V, OPT32)

44W69578

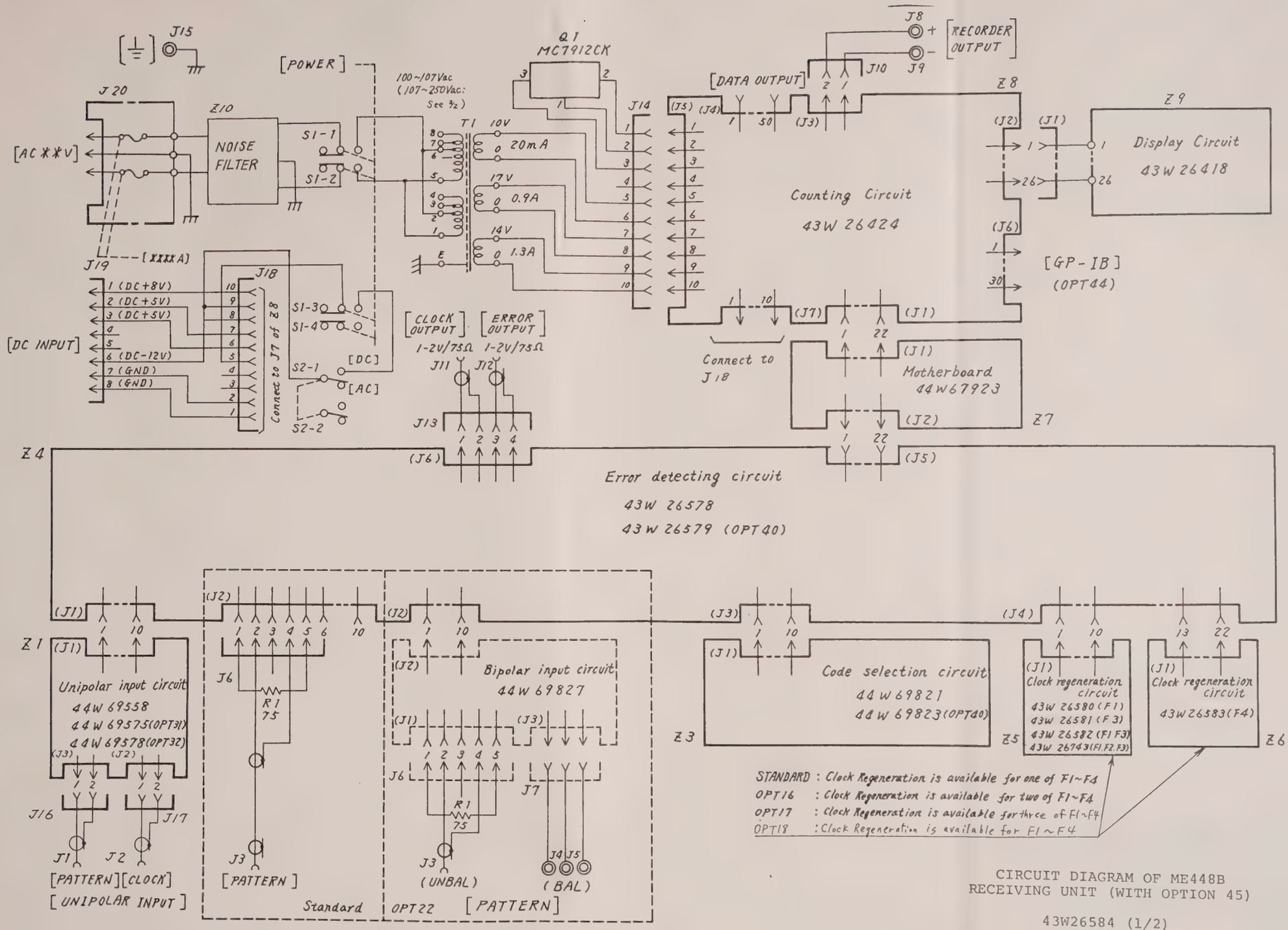


Component list | 44W 69832

CIRCUIT DIAGRAM OF ME448B
RECEIVING UNIT (WITH OPTION 45)

43W26584 (1/2)

Connection of T1 (107~250 Vac)

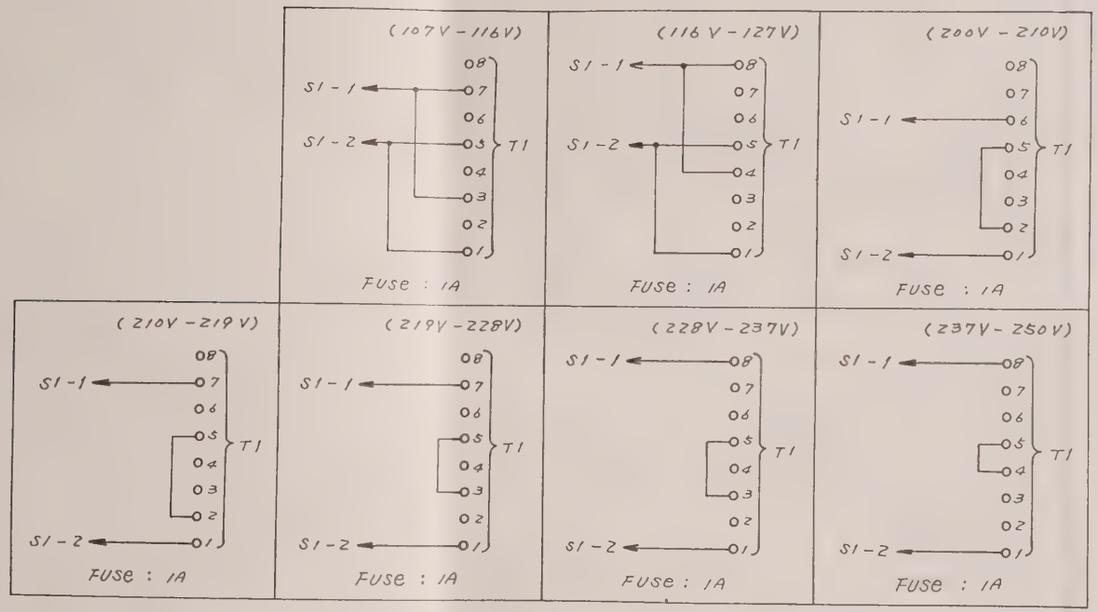


CIRCUIT DIAGRAM OF ME448B
RECEIVING UNIT (WITH OPTION 45)

43W26584 (2/2)

6-119/(6-120 blank)

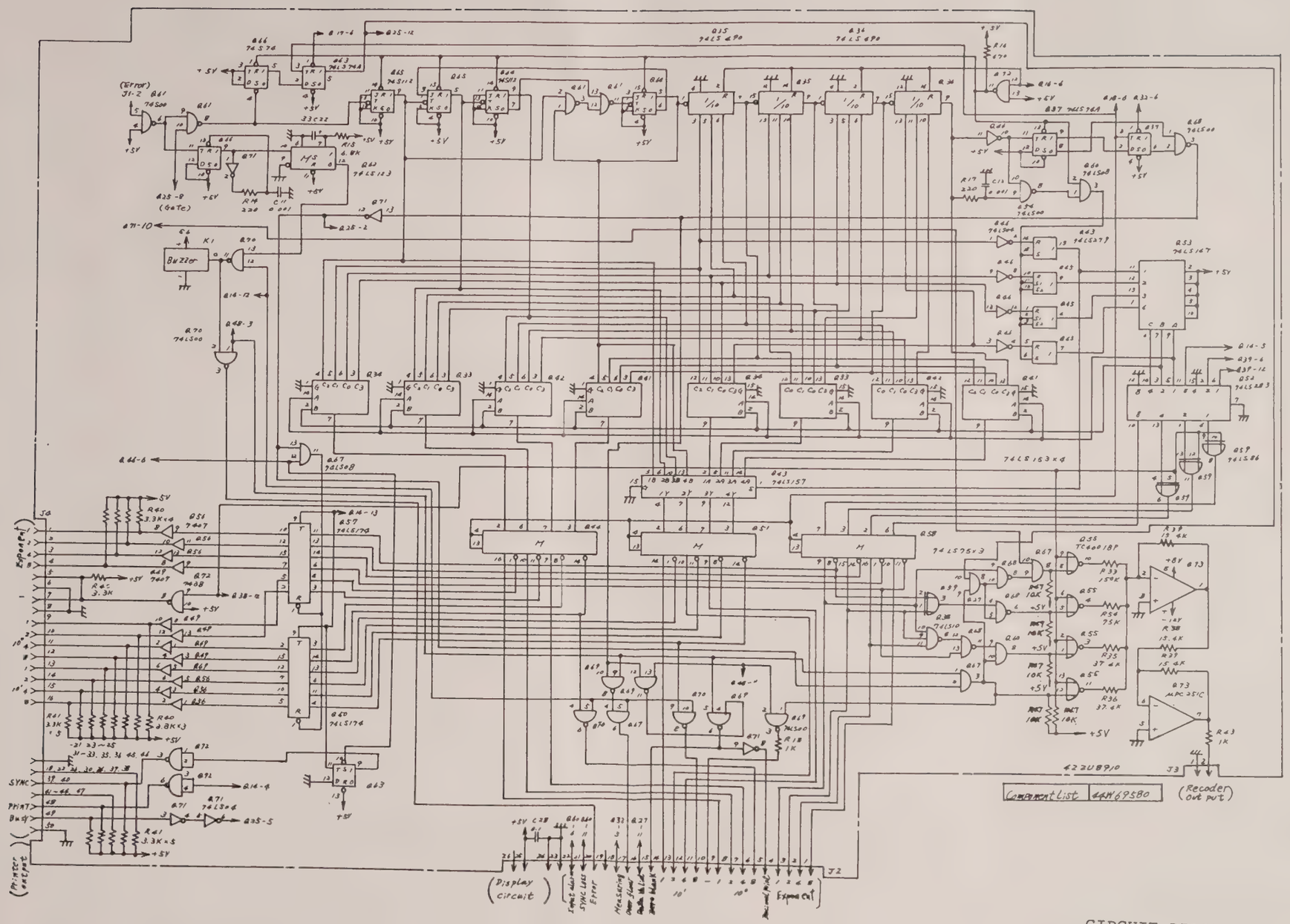


CIRCUIT DIAGRAM OF
COUNTING CIRCUIT (WITH OPT45)

43W26424 (1/3)

6-121/(6-122 blank)

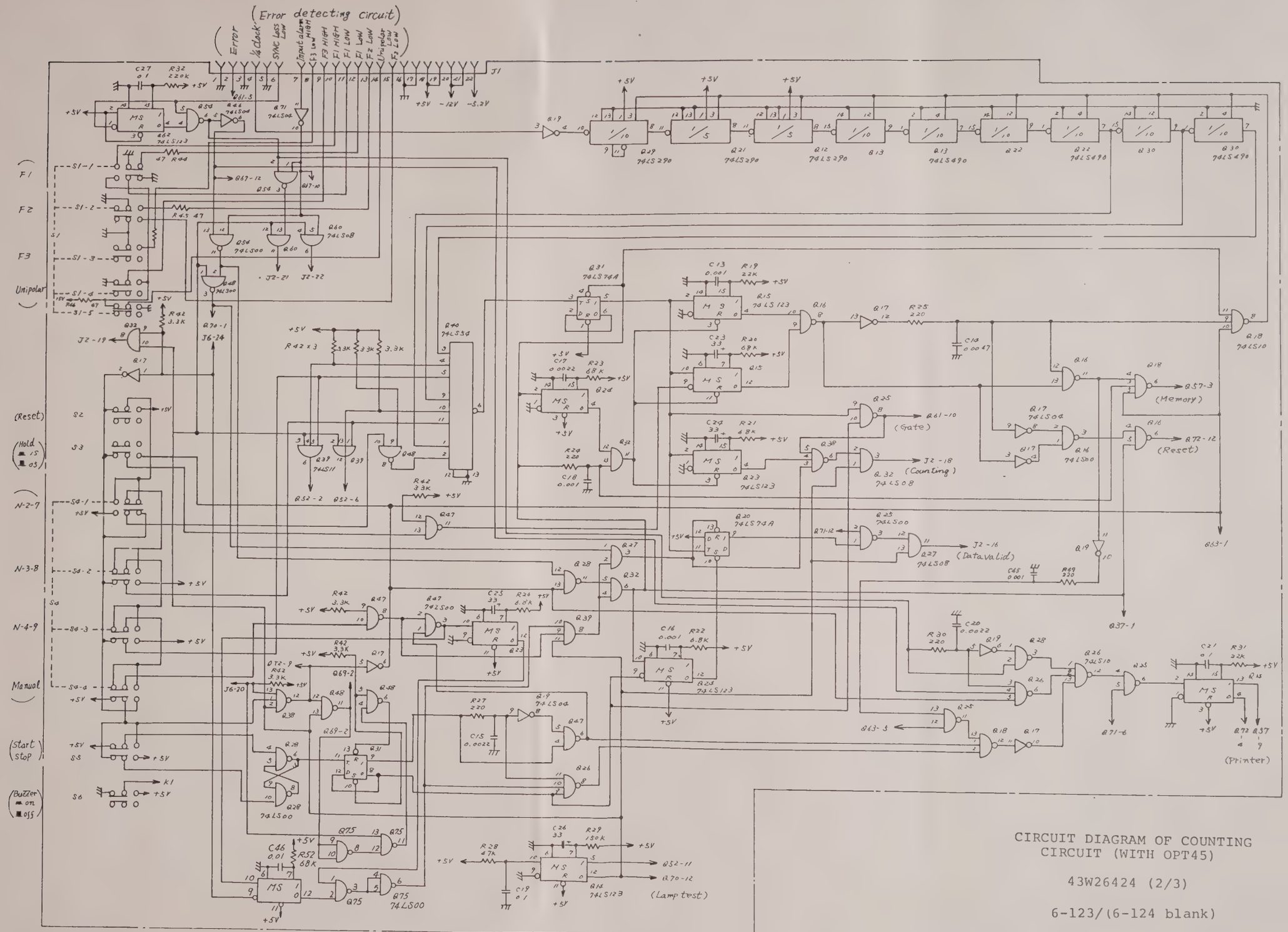


CIRCUIT DIAGRAM OF COUNTING CIRCUIT (WITH OPT45)

43W26424 (2/3)

6-123/(6-124 blank)

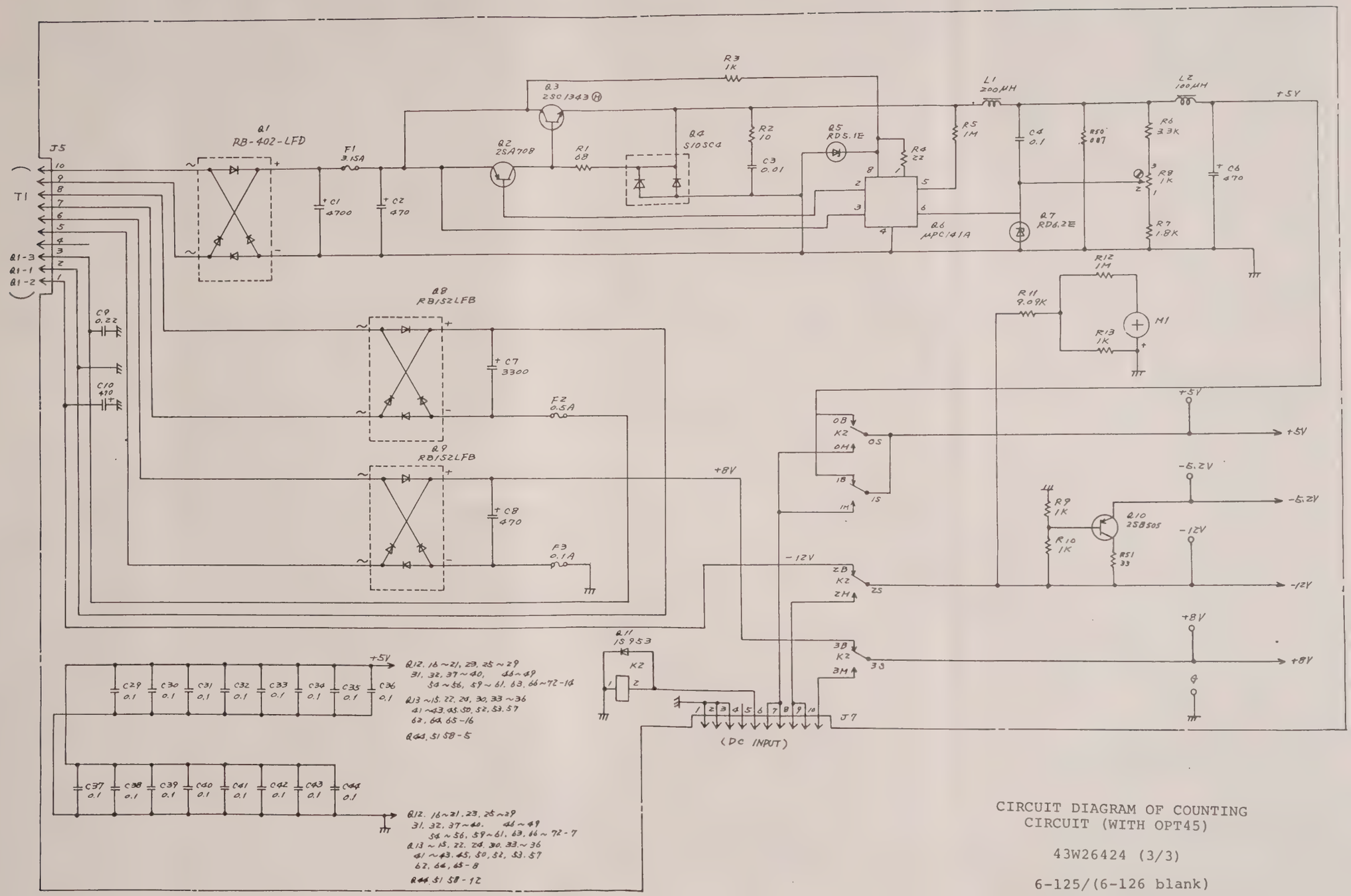


CIRCUIT DIAGRAM OF COUNTING CIRCUIT (WITH OPT45)

43W26424 (3/3)

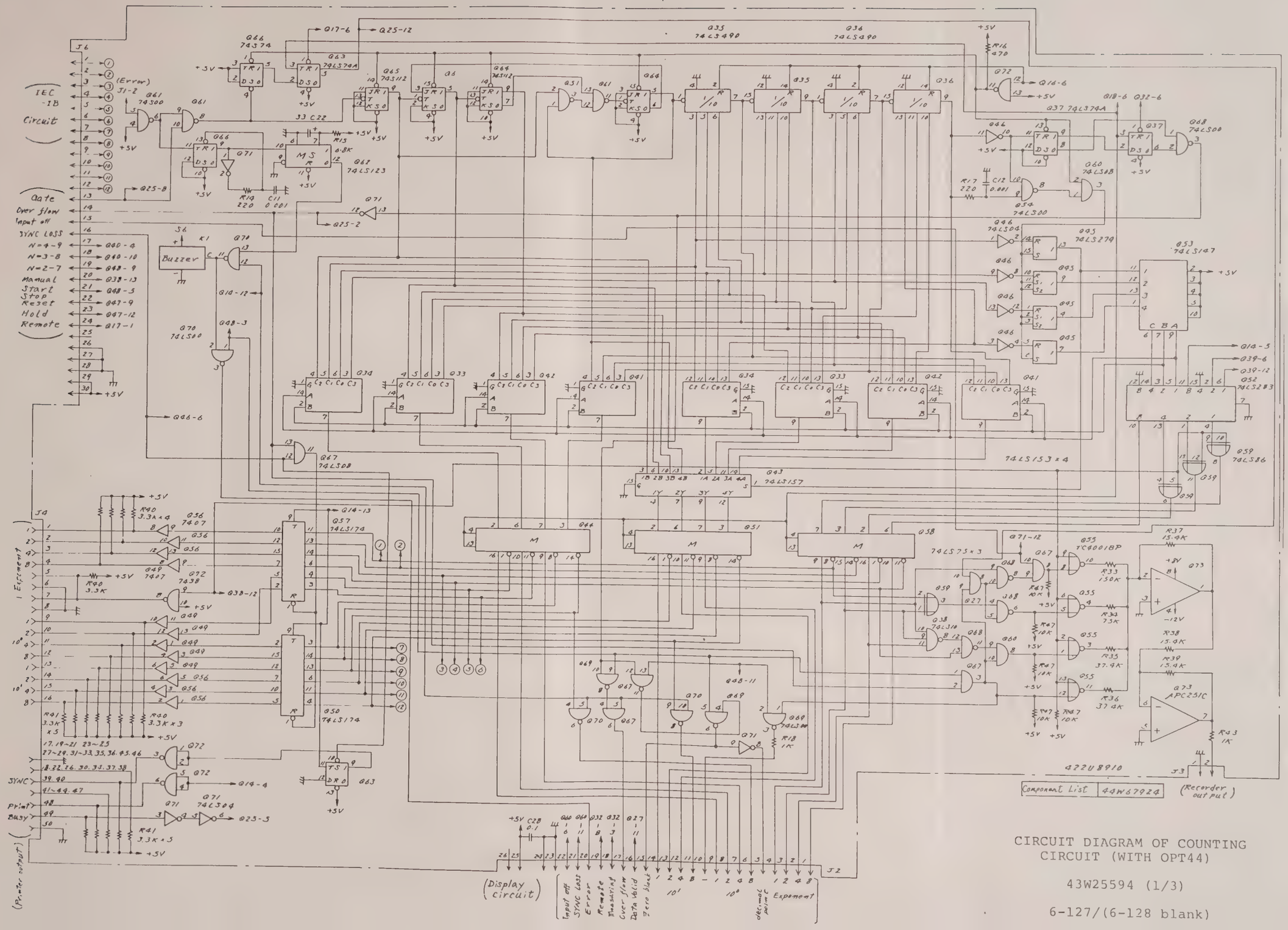


CIRCUIT DIAGRAM OF COUNTING CIRCUIT (WITH OPT44)

43W25594 (1/3)

6-127/(6-128 blank)

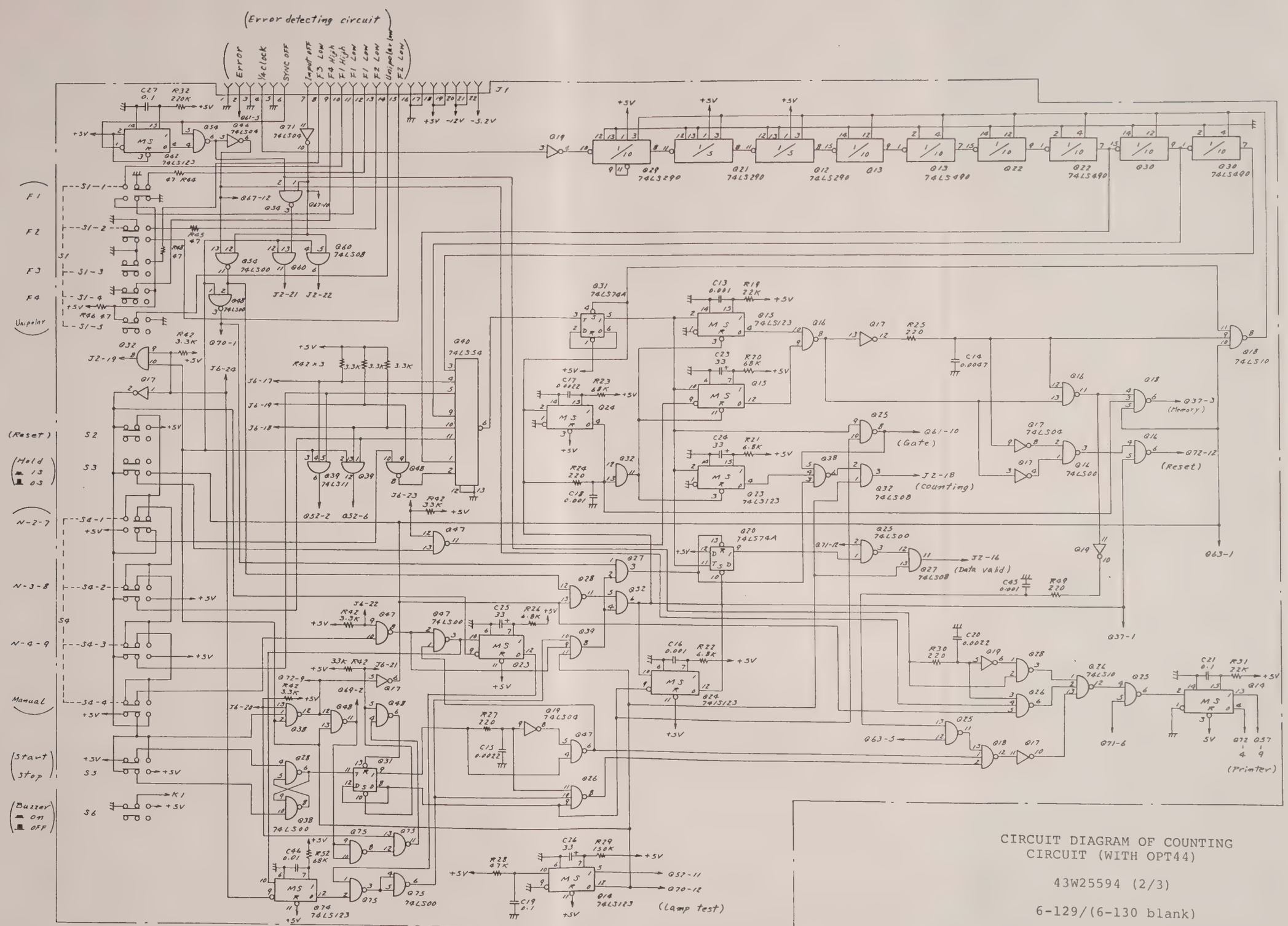


CIRCUIT DIAGRAM OF COUNTING CIRCUIT (WITH OPT44)

43W25594 (2/3)

6-129/(6-130 blank)

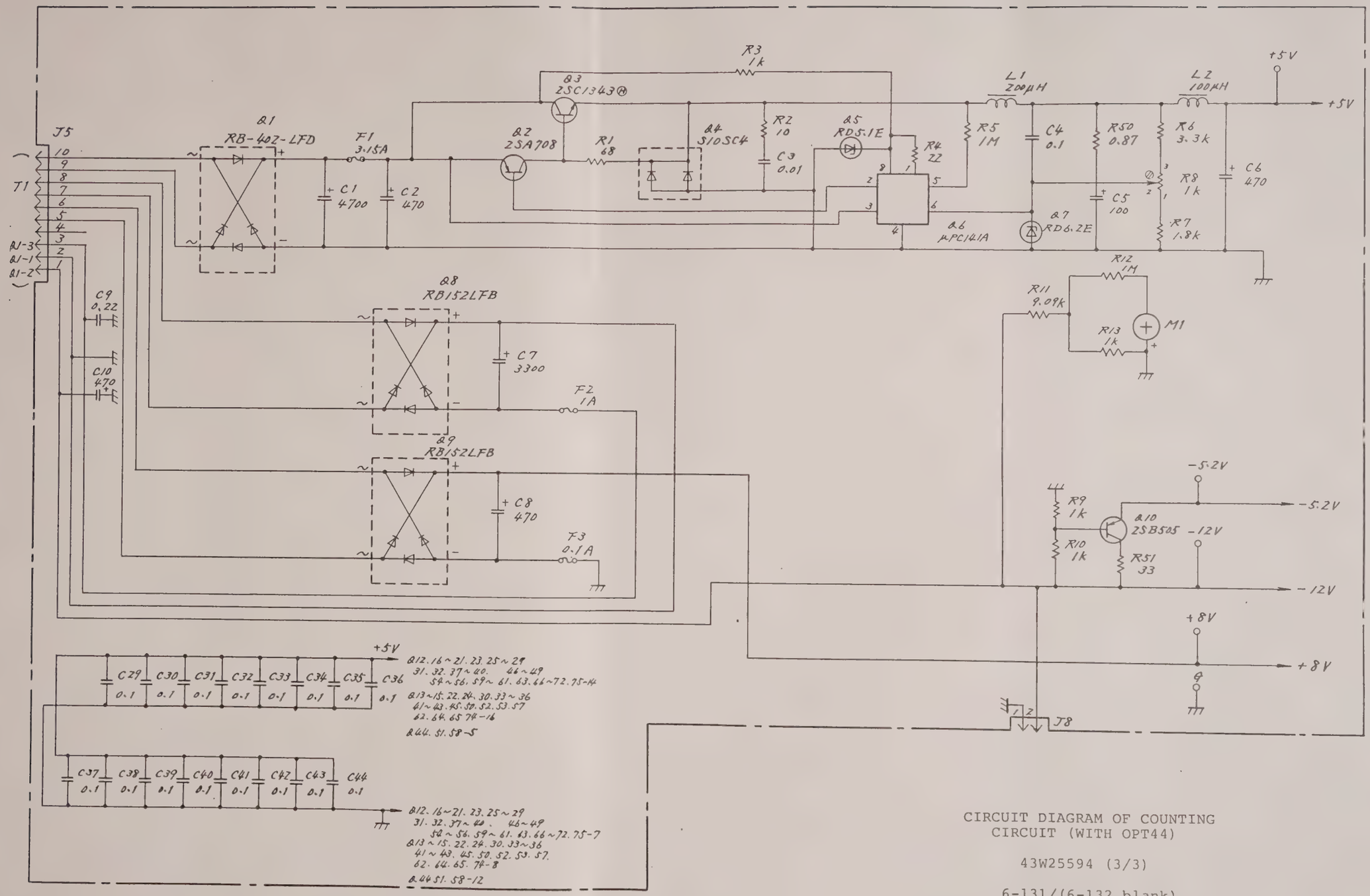


CIRCUIT DIAGRAM OF COUNTING CIRCUIT (WITH OPT44)

43W25594 (3/3)

6-131/(6-132 blank)

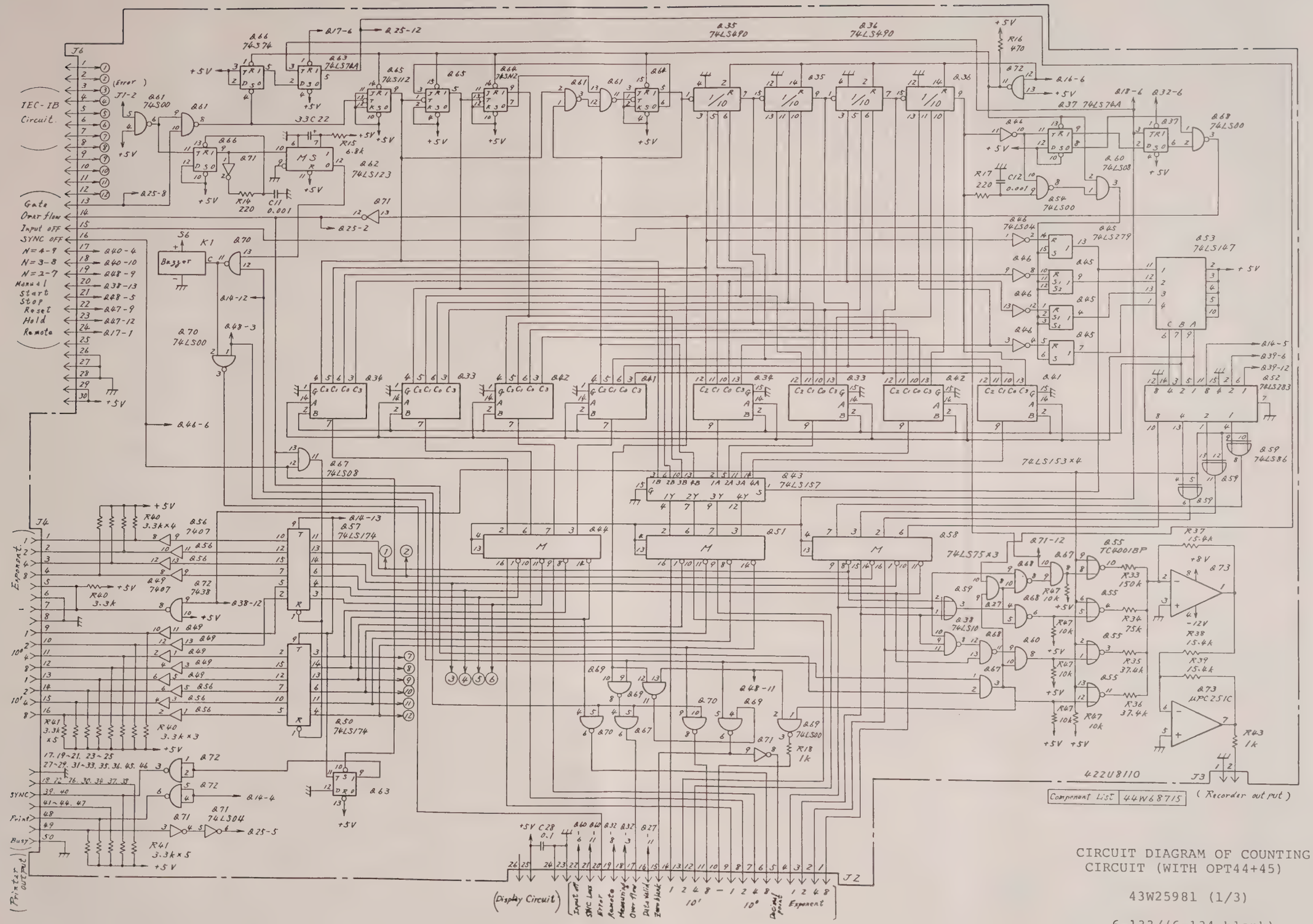


CIRCUIT DIAGRAM OF COUNTING CIRCUIT (WITH OPT44+45)

43W25981 (1/3)

6-133/(6-134 blank)

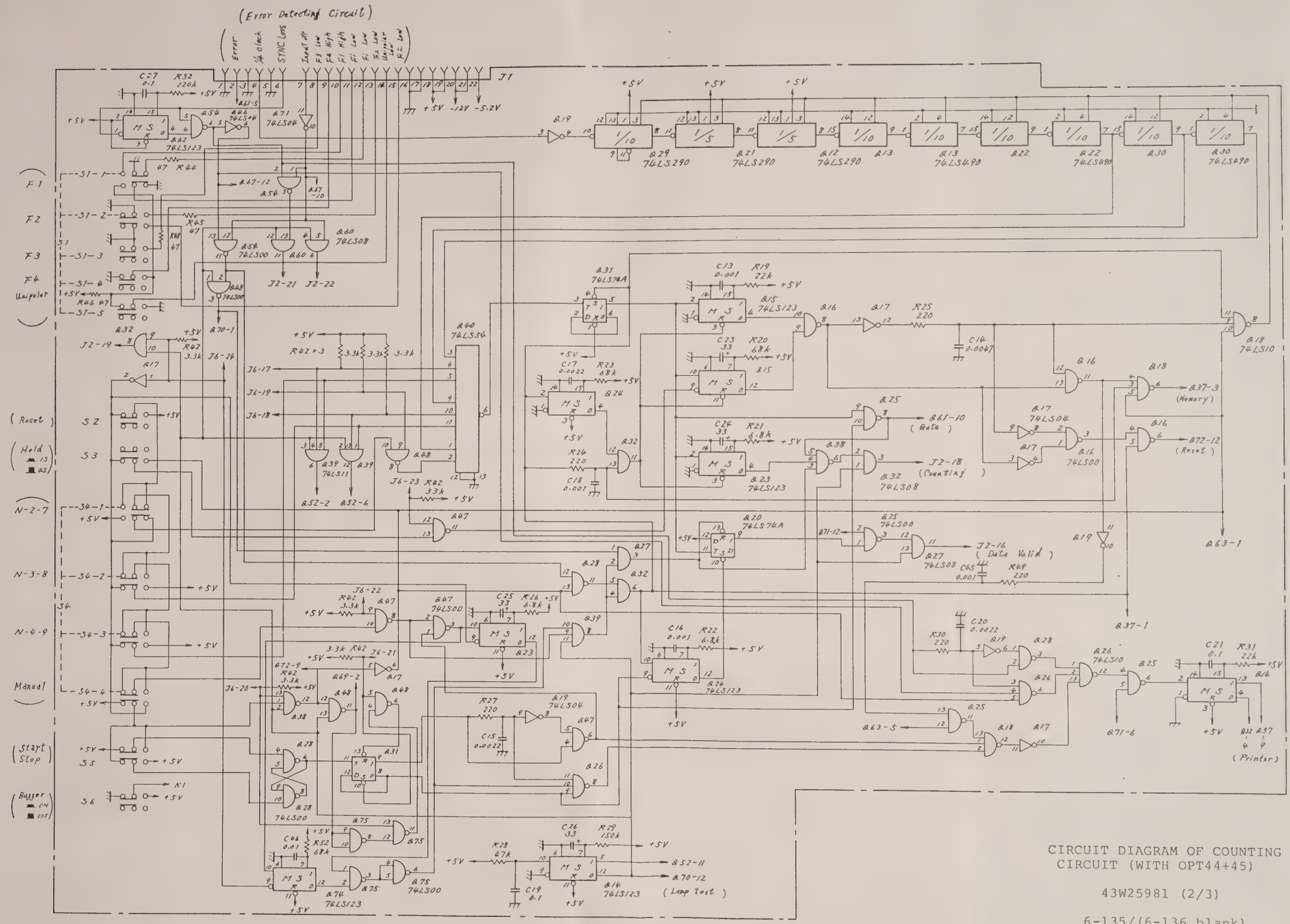


CIRCUIT DIAGRAM OF COUNTING CIRCUIT (WITH OPT44+45)

43W25981 (2/3)

6-135/(6-136 blank)

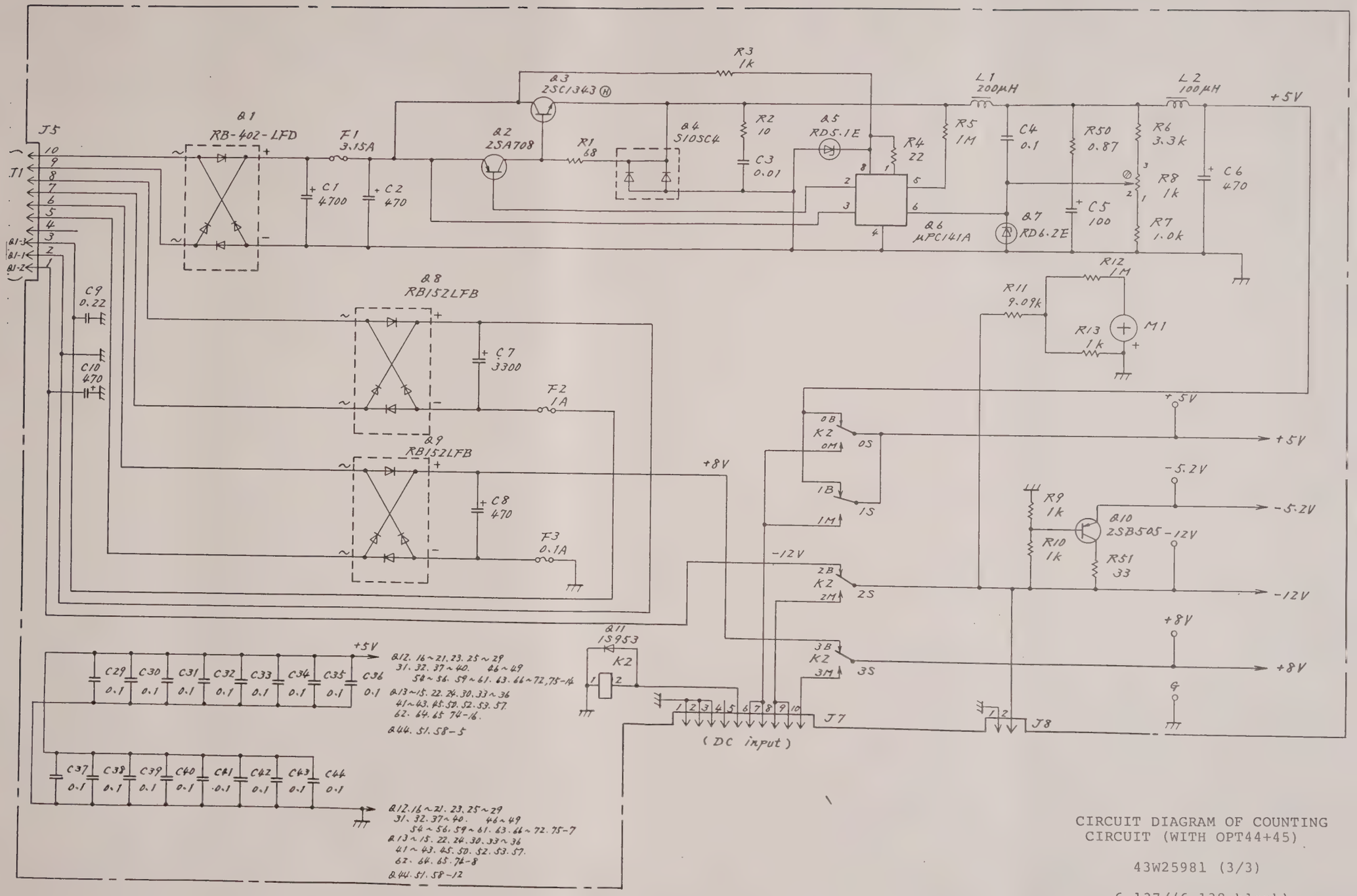


CIRCUIT DIAGRAM OF COUNTING CIRCUIT (WITH OPT44+45)

43W25981 (3/3)

6-137/(6-138 blank)

## REPLACEABLE PARTS

### Introduction

This section contains information relative to ordering replacement components. The following table shows circuit references (hereinafter CKT REF) and abbreviations used for components given in the component list.

In the component list, the quantity of each component is one so far as no quantitative description is given in the "NOTE" columnn.

131

# Circuit Reference and Abbreviations Used in Components List

## CKT REF

| | | | |
|---|---|---|---|
| C: | Capacitor | Q: | Transistor, diode, rectifier, IC |
| F: | Fuse | R: | Resistor |
| J: | Jack, plug, connector | S: | Switch |
| K: | Relay | T: | Transformer |
| L: | Coil | Z: | Unit |
| M: | Meter, timer | | |

## Abbreviations

| | | | |
|---|---|---|---|
| A: | amperes | Multi: | multiplying |
| R var: | resistive elements | Nch: | N channel |
| BL: | boundary layer | non-line: | non-linear taper |
| Cer: | ceramic | Non-pol: | non-polarity |
| CF: | carbon film | NPN: | negative-positive-negative |
| Comp: | compsition | Ω: | ohms |
| Di: | diode | p: | pico (x $10^{-12}$) |
| DIL type: | dual-in type | Plast: | plastic film |
| Elect: | electrolyte aluminum | PMTR: | potentiometer |
| F: | farad | PNP: | positive-negative-positive |
| FET: | field effect transistor | p-p, pp: | peak to peak value |
| G: | ground | RFC: | RF choke |
| H: | henry | rms: | effective value (root means square) |
| Hz: | hertz | SBD: | Schottky barrier diode |
| IC: | integrated circuit | Si: | sillicon |
| J-FET: | junction FET | Tant: | tantalum |
| k: | kilo (x $10^{3}$) | Tr: | transistor |
| LED: | light emiting diode | Trans: | transformer |
| M: | mega (x $10^{6}$) | μ: | micro (x $10^{-6}$) |
| m: | mili (x $10^{-3}$) | V: | volt |
| MF: | metalized film | Var: | variable |
| MOS-FET: | metal oxide semiconductor FET | WW: | wire wound |
| M paper: | metalized paper | XTAL: | crystal |
| M plast: | metalized plastic film | | |

# Method of Reading Capacitor

(a) Ceramic capacitor, polyester capacitor

| Indication | 0.5 | 1 | 10 | 101 | 102 | 103 | 104 |
|---|---|---|---|---|---|---|---|
| Capacity | 0.5 pF | 1 pF | 10 pF | 100 pF | 1000 pF | 0.01 μF | 0.1 F |

Example

Ceramic Capacitor

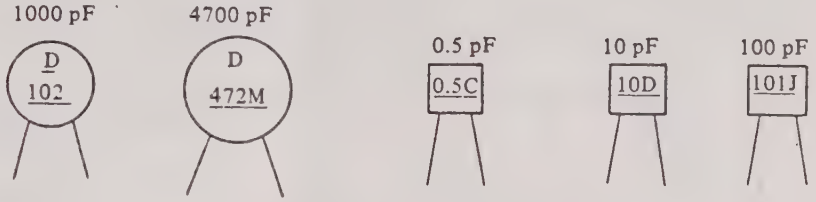


Capacity values are always underlined.

Polyester Capacitor

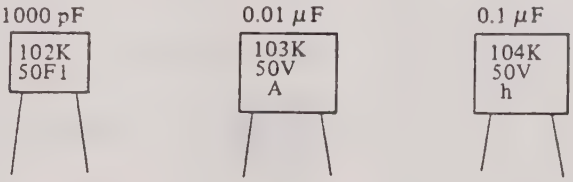


132

# Method of Reading Resistance

Indication of resistance are as follows:

| Color | ① Figure | ② Multiplier | ③ Tolerance |
|---|---|---|---|
| Black | 0 | $10^0$ | |
| Brown | 1 | $10^1$ | |
| Red | 2 | $10^2$ | |
| Yellow red | 3 | $10^3$ | |
| Yellow | 4 | $10^4$ | |
| Green | 5 | $10^5$ | ±0.5% |
| Blue | 6 | $10^6$ | |
| Purple | 7 | $10^7$ | |
| Gray | 8 | $10^8$ | |
| White | 9 | $10^9$ | |
| Golden | | $10^{-1}$ | ±5% |

Indication example

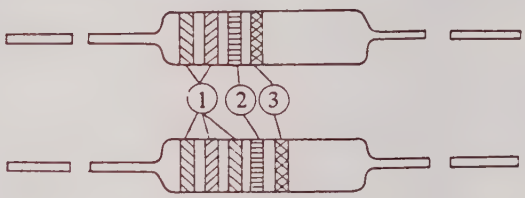


For Example;

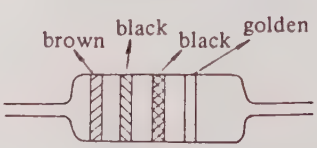


100 ± 5%
10 Ω, ± 5%

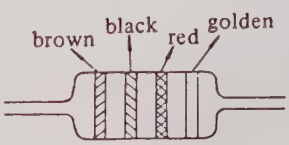


102 ± 5 %
1 kΩ, ± 5 %

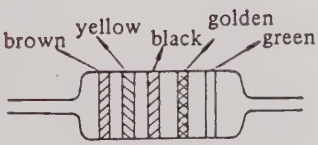


140 -1± 0.5 %
14.0Ω, ±0.5 %

Ordering Information

Upon ordering P.C. boards and components, please give the following descriptions by refering to the component list.

| Item | Example | |
|---|---|---|
| | P.C. board | Component |
| (1) Name of instrument | ERROR RATE MEASURING EQUIPMENT ME448B | ERROR RATE MEASURING EQUIPMENT ME448B |
| (2) Name of component list | Sending Unit | Receiving Unit |
| (3) CKT REF | Z1 | R1 |
| (4) Part name | 442U67722 | ARD25T 750J<br>Note:<br>Part name is given in parentheses ( ) in the component list. Components with asterisks (*) are those that require factory adjustment upon repairing. When ordering a component with asterisk(*), give full description of the component. |
| (5) Quantity | 1 | 1 |
| (6) Serial No. of instrument | Serial No. M31257 | Serial No. M31257 |

COMPONENT LIST OF ERROR RATE MEASURING EQUIPMENT ME448B SENDING UNIT

| CKT REF | | DESCRIPTION | RATING | NOTE |
|---|---|---|---|---|
| G | 1 | Fan,(44G55383) | | |
| J | 1 | Receptacle,(3C-R) | | |
| J | 2 | Connector,(PI011-2F) | | |
| J | 3 | Connector,(U-SA1003) | | |
| J | 4 | Terminal,(34E772) | | |
| J | 5 | AC Inlet,(44J69939) | | with fuse |
| S | 1 | Pushbutton, (NE-15J(2)-2U) | | |
| T | 1 | Power trans,(44T67692) | | |

( ): Manufacturer's part number

· : Selected at factory

| CKT REF | | DESCRIPTION | RATING | NOTE |
|---|---|---|---|---|
| Z | 1 | 442U67722P.C.Board CLOCK GENERATING CIRCUIT | | 44W69549 |
| Z | 2 | 422U8906P.C.Board PATTERN GENERATING CIRCUIT | | 44W69544 |
| Z | 3 | 442U67730P.C.Board UNIPOLAR OUTPUT CIRCUIT(ECL) | STANDARD | 44W69545 |
| | | 442U69093P.C.Board UNIPOLAR OUTPUT CIRCUIT | OPTION31 | 44W69550 *1) |
| | | 442U67732P.C.Board UNIPOLAR OUTPUT CIRCUIT(0/+3V) | OPTION32 | 44W69551 |
| | | UNIPOLAR OUTPUT CIRCUIT(RZ 0/+3V) | OPTION33 | |
| Z | 4 | 442U67724P.C.Board MOTHER BOARD CIRCUIT | | 44W69546 |
| Z | 5 | 422U8908P.C.Board BIPOLAR OUTPUT CIRCUIT | | 44W69814 |
| Z | 6 | 442U67722P.C.Board CLOCK GENERATING CIRCUIT | OPTION11 or 12 | 44W69549 Q'ty 0 or 1,*2) |
| Z | 7 | 442U67726P.C.Board BIPOLAR OUTPUT CIRCUIT(UNBAL,24CH) | OPTION21 | 44W69815 Q'ty 0 or 1,*3) |
| | | 442U67728P.C.Board BIPOLAR OUTPUT CIRCUIT(BAL,24CH) | OPTION22 | 44W69816 Q'ty 0 or 1,*3) |
| Z | 8 | Noise filter, (ZMB2203-13) | | |

* 1) Only one of four P.C. Boards is mounted.
* 2) Mounted only when option 11 or 12 was specified.
* 3) Mounted only when option 21 or 22 was specified.

134

( ) : Manufacturer - part number
* : Selected at factory

# C.L. OF PATTERN GENERATING CIRCUIT

| CKT REF | DESCRIPTION | RATING | | NOTE |
|---|---|---|---|---|
| C 1 | Cer,(CK924F1H104Z) | 0.1μF,+80/-20%,50V | | |
| C 2 | Cer,(CK924F1H104Z) | 0.1μF,+80/-20%,50V | | |
| C 3 | Cer,(CK924C1H472M) | 4700pF,±20%,50V | | |
| C 4 | Elect,(CE04C1E220) | 22μF,+100/-10%,25V | | |
| C 5 | Elect,(CE04C1A101) | 100μF,+100/-10%,10V | | |
| C 6 | Cer,(CK924C1H472M) | 4700pF,±20%,50V | | |
| C 7 | Cer,(CK924C1H472M) | 4700pF,±20%,50V | | |
| C 8 | Elect,(CE04C1A470) | 47μF,+100/-10%,10V | | |
| C 9 | Plast,(ECQ-M1H104KZ) | 0.1μF,±10%,50V | | |
| C 10 | Cer,(CK924C1H472M) | 4700pF,±20%,50V | | |
| C 11 | Cer,CK924F1H104Z) | 0.1μF,+80/-20%,50V | | |
| C 12 | Cer,CK924F1H104Z) | 0.1μF,+80/-20%,50V | | |
| C 13 | Cer,CK924F1H104Z) | 0.1μF,+80/-20%,50V | | |
| C 14 | Cer,CK924F1H104Z) | 0.1μF,+80/-20%,50V | | |
| C 15 | Plast,(ECQ-M1H104KZ) | 0.1μF,±10%,50V | | |
| C 16 | Plast,(ECQ-M1H104KZ) | 0.1μF,±10%,50V | | |
| C 17 | Plast,(ECQ-M1H104KZ) | 0.1μF,±10T,50V | | |
| C 18 | Elect,(CE04C1A470) | 47μF,+100/-10%,10V | | |
| C 19 | Cer,(CK924F1H104Z) | 0.1μF,+80/-20%,50V | | |
| C 20 | Cer,(CK924F1H104Z) | 0.1μF,+80/-20%,50V | | |
| C 21 | Cer,(CK924F1H104Z) | 0.1μF,+80/-20%,50V | | |
| C 22 | Cer,(CK924F1H104Z) | 0.1μF,+80/-20%,50V | | |
| C 23 | Elect,(CE04C1A470) | 47μF,+100/-10%,10V | | |
| C 24 | Cer,(CC924CH1H070D) | 7pF,±0.5pF,50V | | |
| C 25 | Cer,(CC924CH1H070D) | 7pF,±0.5pF,50V | | |
| J 1 | Connector,(U-SB1501) | | | |
| J 2 | Connector,(U-SB1501) | | | |
| J 3 | Connector,(U-SB1501) | | | |
| J 4 | Connector,(U-SB1501) | | | |
| J 5 | Receptacle, (3CR) | | | |
| J 6 | Connector,(PI011-2M) | | | |
| J 7 | Connector,(PI011-2M) | | | |
| J 8 | Connector,(PI011-2M) | | | |
| J 9 | Connector,(PI011-2F) | | | |
| Q 1 | IC,(HD10102) | | | |
| Q 2 | IC,(HD10116) | | | |
| Q 3 | IC,(HD10110) | | | |
| Q 4 | IC,(MC10176L) | | | |
| Q 5 | IC,(MC10176L) | | | |
| Q 6 | IC,(MC10176L) | | | |
| Q 7 | IC,(MC10176L) | | | |
| Q 8 | IC,(HD10131) | | | |
| Q 9 | IC,(HD10107) | | | |
| Q 10 | IC,(HD10102) | | | |

( ): Manufacturer's part number

* : Selected at factory

| CKT REF | DESCRIPTION | RATING | | NOTE |
|---|---|---|---|---|
| Q 11 | IC,(HD10136) | | | |
| Q 12 | IC,(HD10136) | | | |
| Q 13 | IC,(MC10103L) | | | |
| Q 14 | IC,(HD10107) | | | |
| Q 15 | IC,(HD10107) | | | |
| Q 16 | IC,(HD10107) | | | |
| Q 17 | IC,(HD10102) | | | |
| Q 18 | IC,(HD10102) | | | |
| Q 19 | IC,(HD10102) | | | |
| Q 20 | Not assigned | | | |
| Q 21 | Not assigned | | | |
| Q 22 | Not assigned | | | |
| Q 23 | IC,(MC10176L) | | | |
| Q 24 | IC,(MC10103L) | | | |
| Q 25 | IC,(MC10103L) | | | |
| Q 26 | IC,(HD10110) | | | |
| Q 27 | IC,(HD10110) | | | |
| Q 28 | IC,(HD10102) | | | |
| Q 29 | IC,(HD10131) | | | |
| Q 30 | IC,(HD10102) | | | |
| Q 31 | IC,(MC10135L) | | | |
| Q 32 | IC,(HD10131) | | | |
| Q 33 | IC,(HD10131) | | | |
| Q 34 | IC,(HD10131) | | | |
| Q 35 | IC,(MC10176L) | | | |
| Q 36 | Not assigned | | | |
| Q 37 | IC,(MC10176L) | | | |
| Q 38 | Not assigned | | | |
| Q 39 | Di,Si,(1S953) | | | |
| Q 40 | Di,Si,(1S953) | | | |
| Q 41 | Di,breakdown,(02BZ2.2) | | | |
| Q 42 | Tr,Si,PNP,(2SA883) | | | |
| Q 43 | Tr,Si,PNP,(2SA883) | | | |
| R 1 | CF,(ARD25T111J) | 110Ω,±5%,1/4W | | |
| R 2 | CF,(ARD25T111J) | 110Ω,±5%,1/4W | | |
| R 3 | CF,(ARD25T181J) | 180Ω,±5%,1/4W | | |
| R 4 | CF,(ARD25T181J) | 180Ω,±5%,1/4W | | |
| R 5 | CF,(ARD25T750J) | 75Ω,±5%,1/4W | | |
| R 6 | CF,(ARD25T103J) | 10kΩ,±5%,1/4W | | |
| R 7 | CR,(ARD25T223J) | 22kΩ,±5%,1/4W | | |
| R 8 | Var,MF,(RJ-6P 20kΩ) | Max.20kΩ,1/2W | | |
| R 9 | Not assigned | | | |
| R 10 | Single-in, line type, array,(IHR-6-471JA) | 470Ω×6,±5%,1/8W | | |

( ): Manufacturer's part number

* : Selected at factory

| CRT REF | DESCRIPTION | RATING | | NOTE |
|---|---|---|---|---|
| R 11 | Single-in, line type, array,(IHR-4-471JA) | 470Ω×4,±5%,1/8W | | |
| R 12 | Single-in, line type, array,(IHR-6-681JA) | 680Ω×6,±5%,1/8W | | |
| R 13 | Single-in, line type, array,(IHR-6-681JA) | 680Ω×6,±5%,1/8W | | |
| R 14 | Single-in, line type, array,(IHR-6-681JA) | 680Ω×6,±5%,1/8W | | |
| R 15 | Single-in, line type, array,(IHR-6-681JA) | 680Ω×6,±5%,1/8W | | |
| R 16 | Single-in, line type, array,(IHR-8-681JA) | 680Ω×8,±5%,1/8W | | |
| R 17 | CF,(ARD25T681J) | 680Ω,±5%,1/4W | | |
| R 18 | CF,(ARD25T153J) | 15kΩ,±5%,1/4W | | |
| R 19 | CF,(ARD25T4R7J) | 4.7Ω,±5%,1/4W | | |
| R 20 | CF,(ARD25T471J) | 470Ω,±5%,1/4W | | |
| R 21 | Not assigned | | | |
| R 22 | CF,(ARD25T222J) | 2.2kΩ,±5%,1/4W | | |
| R 23 | Not assigned | | | |
| R 24 | CF,(ARD25T471J) | 470Ω,±5%,1/4W | | |
| R 25 | Single-in, line type, array,(IHR-6-681JA) | 680Ω×6,±5%,1/8W | | |
| R 26 | Single-in, line type, array,(IHR-6-681JA) | 680Ω×6,±5%,1/8W | | |
| R 27 | Single-in, line type, array,(IHR-6-681JA) | 680Ω×6,±5%,1/8W | | |
| R 28 | Single0in, line type, array,(IHR-4-472JA) | 4.7kΩ×4,±5%,1/8W | | |
| R 29 | CF,(ARD25T102J) | 1kΩ,±5%,1/4W | | |
| R 30 | CF,(ARD25T102J) | 1kΩ,±5%,1/4W | | |
| R 31 | Single-in, line type, array,(IHR-6-681JA) | 680Ω×6,±5%,1/8W | | |
| R 32 | Single-in, line type, array,(IHR-6-681JA) | 680Ω×6,±5%,1/8W | | |
| R 33 | Single-in, line type, array,(IHR-6-471JA) | 470Ω×6,±5%,1/8W | | |
| R 34 | CF,(ARD25T111J) | 110Ω,±5%,1/4W | | |
| R 35 | CF,(ARD25T181J) | 180Ω,±5%,1/4W | | |
| R 36 | Single-in, line type, array,(IHR-6-681JA) | 680Ω×6,±5%,1/8W | | |
| R 37 | Not assigned | | | |
| R 38 | Single-in, line type, array,(IHR-6-102JB) | 1kΩ×6,±5%,1/8W | | |
| R 39 | Single-in, line type, array,(IHR-6-681JA) | 680Ω×6,±5%,1/8W | | |
| R 40 | Single-in, line type, array,(IHR-6-681JA) | 680Ω×6,±5%,1/8W | | |

( ): Manufacturer's part number

| CKT REF | DESCRIPTION | RATING | | NOTE |
|---|---|---|---|---|
| R 41 | CF,(ARD25T471J) | 470Ω,±5%,1/4W | | |
| R 42 | Single-in, line type, array,(IHR-6-681JA) | 680Ω×6,±5%,1/8W | | |
| R 43 | Not assigned | | | |
| R 44 | Single-in, line type, array,(IHR-6-681JA) | 680Ω×6,±5%,1/8W | | |
| R 45 | Not assigned | | | |
| R 46 | CF,(ARD25T472J) | 4.7kΩ,±5%,1/4W | | |
| R 47 | CF,(ARD25T102J) | 1kΩ,±5%,1/4W | | |
| R 48 | CR,(ARD25T390J) | 39Ω,±5%,1/4W | | |
| R 49 | CF,(ARD25T103J) | 10kΩ,±5%,1/4W | | |
| R 50 | CF,(ARD25T472J) | 4.7kΩ,±5%,1/4W | | |
| R 51 | CF,(ARD25T510J) | 51Ω,±5%,1/4W | | |
| R 52 | CF,(ARD25T510J) | 51Ω,±5%,1/4W | | |
| R 53 | CF,(ARD25T510J) | 51Ω,±5%,1/4W | | |
| R 54 | CF,(ARD25T510J) | 51Ω,±5%,1/4W | | |
| R 55 | CF,(ARD25T221J) | 220Ω,±5%,1/4W | | |
| R 56 | CF,(ARD25T221J) | 220Ω,±5%,1/4W | | |
| R 57 | CF,(ARD25T221J) | 220Ω,±5%,1/4W | | |
| R 58 | CF,(ARD25T221J) | 220Ω,±5%,1/4W | | |
| S 1 | Pushbutton,(5F104UGr) | | | |
| S 2 | Pushbutton,(1F2U0A) | | | |

( ): Manufacturer's part number

* : Selected at factory

| CKT REF | DESCRIPTION | RATING | | NOTE |
|---|---|---|---|---|
| C 1 | Cer,(CK924F1H104Z) | 0.1μF,+80/-20%,50V | | |
| C 2 | Cer,(CK924F1H104Z) | 0.1μF,+80/-20%,50V | | |
| J 1 | Connector,(U-PB1519) | | | |
| J 2 | Receptacle,(3C-R) | | | |
| J 3 | Receptacle,(3C-R) | | | |
| J 4 | Receptacle,(3C-R) | | | |
| J 5 | Receptacle,(3C-R) | | | |
| J 6 | Receptacle,(3C-R) | | | |
| J 7 | Receptacle,(3C-R) | | | |
| Q 1 | IC,(HD10131) | | | |
| Q 2 | IC,(HD10131) | | | |
| Q 3 | IC,(HD10102) | | | |
| Q 4 | IC,(HD10105) | | | |
| Q 5 | IC,(HD10105) | | | |
| R 1 | Single-in, line type, array,(IHR-i-681JA) | 680Ω×8,±5%,1/8W | | |
| R 2 | CF,(ARD25T111J) | 110Ω,±5%,1/4W | | |
| R 3 | CF,(ARD25T181J) | 180Ω,±5%,1/4W | | |
| R 4 | Single-in, line type, array,(IHR-6-471JA) | 470Ω×6,±5%,1/8W | | |
| R 5 | Single-in, line type, array,(IHR-4-471JA) | 470Ω×4,±5%,1/8W | | |
| R 6 | CF,(ARD25%111J) | 110Ω,±5%,1/4W | | |
| R 7 | CF,(ARD25T181J) | 180Ω,±5%,1/4W | | |
| R 8 | CF,(ARD25T750J) | 75Ω,±5%,1/4W | | |
| R 9 | CF,(ARD25T750J) | 75Ω,±5%,1/4W | | |
| R 10 | CF,(ARD25T750J) | 75Ω,±5%,1/4W | | |
| R 11 | CF,(ARD25T750J) | 75Ω,±5%,1/4W | | |
| R 12 | CF,(ARD25T750J) | 75Ω,±5%,1/4W | | |
| R 13 | CF,(ARD25T750J) | 75Ω,±5%,1/4W | | |

( ): Manufacturer's part number

* : Selected at factory

| CRT REF | DESCRIPTION | RATING | | NOTE |
|---|---|---|---|---|
| J 1 | Connector,(U-PB2221) | | | |
| J 2 | Connector,(U-PB2221) | | | |

137
A/B

( ): Manufacturer's part number

* : Selected at factory

C.L.OF BIPOLAR OUTPUT CIRCUIT (24CH)

| CKT REF | DESCRIPTION | RATING | | NOTE |
|---|---|---|---|---|
| C 1 | Cer,(CK924F1H104Z) | 0.1μF,+80/-20%,50V | | |
| C 2 | Cer,(CK924F1H104Z) | 0.1μF,+80/-20%,50V | | |
| C 3 | Cer,(CK924F1H104Z) | 0.1μF,+80/-20%,50V | | |
| C 4 | Cer,(CK924F1H104Z) | 0.1μF,+80/-20%,50V | | |
| C 5 | Cer,(CK924F1H104Z) | 0.1μF,+80/-20%,50V | | |
| C 6 | Cer,(CK924F1H104Z) | 0.1μF,+80/-20%,50V | | |
| C 7 | Cer,(RPE114C105M50V) | 1μF,±20%,50V | | |
| C 8 | Cer,(RPE114C105M50V) | 1μF,±20%,50V | | |
| C 9 | Cer,(CK924F1H104Z) | 0.1μF,+80/-20%,50V | | |
| C 10 | Cer,(CK924F1H104Z) | 0.1μF,+80/-20%,50V | | |
| C 11 | Not assigned | | | |
| C 12 | Not assigned | | | |
| C 13 | Cer,(CK924F1H104Z) | 0.1μF,+80/-20%,50V | | |
| C 14 | Cer,(CK924F1H104Z) | 0.1μF,+80/-20%,50V | | |
| C 15 | Cer,(CK924F1H104Z) | 0.1μF,+80/-20%,50V | | |
| C 16 | Cer,(CK924F1H104Z) | 0.1μF,+80/-20%,50V | | |
| C 17 | Cer,(CK924F1H104Z) | 0.1μF,+80/-20%,50V | | |
| C 18 | Cer,(CK924F1H104Z) | 0.1μF,+80/-20%,50V | | |
| C 19 | Cer,(CK924F1H104Z) | 0.1μF,+80/-20%,50V | | |
| C 20 | Cer,(CK924F1H104Z) | 0.1μF,+80/-20%,50V | | |
| C 21 | Not assigned | | | |
| C 22 | Not assigned | | | |
| C 23 | Not assigned | | | |
| C 24 | Not assigned | | | |
| C 25 | Elect,(CE02W1J102) | 1000μF,+100/-10%,63V | | |
| C 26 | Elect,(CE02W1J332) | 3300μF,+100/-10%,63V | | |
| C 27 | Not assigned | | | |
| C 28 | Elect,(CE02W1J102) | 1000μF,+100/-10%,63V | | |
| C 29 | Elect,(CE02C1V471) | 470μF,+100/-10%,35V | | |
| C 30 | Elect,(CE02C1V471) | 470μF,+100/-10%,35V | | |
| C 31 | Plast,(ECQ-M1H 103KZ) | 0.01μF,±10%,50V | | |
| C 32 | Plast,(ECQ-M1H 103KZ) | 0.01μF,±10%,50V | | |
| C 33 | Plast,(ECQ-M1H 104KZ) | 0.1μF,±10%,50V | | |
| C 34 | Plast,(ECQ-M1H 104KZ) | 0.1μF,±10%,50V | | |
| C 35 | Elect,(CE04C1E101) | 100μF,+100/-10%,25V | | |
| C 36 | Elect,(CE04C1E101) | 100μF,+100/-10%,25V | | |
| C 37 | Elect,(CE04W1E101) | 100μF,+100/-10%,25V | | |
| C 38 | Elect,(CE04W1A101) | 100μF,+100/-10%,10V | | |
| C 39 | Elect,(CE04W1A101) | 100μF,+100/-10%,10V | | |
| C 40 | Elect,(CE04W1E101) | 100μF,+100/-10%,25V | | |
| F 1 | Fuse, (MF51NN250V1.6ADC01) | 1.6A | | |
| F 2 | Fuse, (MF51NN250V3.15ADC01) | 3.15A | | |
| F 3 | Fuse, (MF51NN250V0.8ADC01) | 0.8A | | |

( ): Manufacturer's part number

* : Selected at factory

| CKT REF | DESCRIPTION | RATING | | NOTE |
|---|---|---|---|---|
| J 1 | Connector,(U-SB2201) | | | |
| J 2 | Connector,(U-PB2221) | | | |
| J 3 | Connector,(U-PA1019) | | | |
| J 4 | Receptacle,(3C-R) | | | |
| J 5 | Receptacle,(3C-R) | | | |
| J 6 | Not assigned | | | |
| J 7 | Not assigned | | | |
| K 1 | Relay,(RFT-122E-DC12) | | | |
| K 2 | Relay,(RFT-122E-DC12) | | | |
| L 1 | Coil,(SKC-105B) | 200μH | | |
| L 2 | Coil,(44946058D) | 100μH | | |
| L 3 | Coil,(SKC-105B) | 200μH | | |
| L 4 | Coil,(449T46058D) | 100μH | | |
| L 5 | Coil,(44L63837B) | 0.04μH | | |
| L 6 | Coil,(44L63837B) | 0.04μH | | |
| M 1 | Timer(TM-0) | 5000H | | |
| Q 1 | IC,(HD10102) | | | |
| Q 2 | IC,(HD10109) | | | |
| Q 3 | IC,(HD10109) | | | |
| Q 4 | IC,(HD10116) | | | |
| Q 5 | IC,(HD10101) | | | |
| Q 6 | Tr,Si,PNP,(2SA711K) | | | |
| Q 7 | Tr,Si,PNP,(2SA711K) | | | |
| Q 8 | Tr,Si,PNP,(2SA1161) | | | |
| Q 9 | Tr,Si,PNP,(2SA1161) | | | |
| Q 10 | Tr,Si,PNP,(2SA1161) | | | |
| Q 11 | Tr,Si,PNP,(2SA1161) | | | |
| Q 12 | Tr,Si,NPN,(2SC1907) | | | |
| Q 13 | Tr,Si,NPN,(2SC1907) | | | |
| Q 14 | Tr,Si,NPN,(2SC2498) | | | |
| Q 15 | Tr,Si,NPN,(2SC2498) | | | |
| Q 16 | Tr,Si,PNP,(2SA711K) | | | |
| Q 17 | Tr,Si,PNP,(2SA711K) | | | |
| Q 18 | Tr,Si,PNP,(2SA1161) | | | |
| Q 19 | Tr,Si,PNP,(2SA1161) | | | |
| Q 20 | Tr,Si,PNP,(2SA1161) | | | |

138

( ): Manufacturer's part number

* : Selected at factory

| CKT REF | DESCRIPTION | RATING | NOTE |
|---|---|---|---|
| Q 21 | Tr,Si,PNP,(2SA1161) | | |
| Q 22 | Tr,Si,NPN,(2SC1967) | | |
| Q 23 | Tr,Si,NPN,(2SC1907) | | |
| Q 24 | Tr,Si,NPN,(2SC2498) | | |
| Q 25 | Tr,Si,NPN,(2SC2498) | | |
| Q 26 | Di,breakdown, (RD4.3E(3)) | 4.0 to 4.8V,400mW | |
| Q 27 | Di,breakdown, (RD4.3E(3)) | 4.0 to 4.8V,400mW | |
| Q 28 | Di,breakdown, (RD4.3E(3)) | 4.0 to 4.8V,400mW | |
| Q 29 | Di,breakdown, (RD4.3E(3)) | 4.0 to 4.8V,400mW | |
| Q 30 | Di,breakdown, (RD2.7E(3)) | 2.5 to 3.1V,400mW | |
| Q 31 | Di,breakdown, (RD2.7E(3)) | 2.5 to 3.1V,400mW | |
| Q 32 | Di,breakdown, (RD2.7E(3)) | 2.5 to 3.1V,400mW | |
| Q 33 | Di,breakdown, (RD2.7E(3)) | | |
| Q 34 | Di,Si,(1S953) | | |
| Q 35 | Di,Si,(1S953) | | |
| Q 36 | Di,Si,(1S953) | | |
| Q 37 | Not assigned | | |
| Q 38 | Not assigned | | |
| Q 39 | Not assigned | | |
| Q 40 | Not assigned | | |
| Q 41 | Rectifier,(RB-402-LFD) | | |
| Q 42 | Rectifier,(M4C-52-12) | | |
| Q 43 | Rectifier stack, (RB-152LFB) | | |
| Q 44 | Tr,Si,PNP,(2SA708L) | | |
| Q 45 | Tr,Si,NPN,(2SC1343 H ) | | |
| Q 46 | Di,Si,(S5S4) | | |
| Q 47 | Di,breakdown,(RD5.1E) | 4.8 to 5.7V,400mW | |
| Q 48 | IC,(μPC141A) | | |
| Q 49 | Di,breakdown,(RD9.1E) | 8.5 to 10.2V,400mW | |
| Q 50 | Tr,Si,PNP,(2SA708L) | | |
| Q 51 | Tr,Si,NPN,(2SC1343 H ) | | |
| Q 52 | Di,Si,(S10SC4) | | |
| Q 53 | Di,breakdown,(RD5.1E) | 4.8 to 5.7V,400mW | |
| Q 54 | IC,(μPC141A) | | |
| Q 55 | Di,breakdown,(RD6.2E) | 5.8 to 7.0V,400mW | |
| Q 56 | IC,(μPC14305H) | | |
| Q 57 | IC,(MC7912CK) | | |

( ): Manufacturer's part number

* : Selected at factory

| CKT REF | DESCRIPTION | RATING | | NOTE |
|---|---|---|---|---|
| R 1 | CF,(ARD25T111J) | 110Ω,±5%,1/4W | | |
| R 2 | CF,(ARD25T111J) | 110Ω,±5%,1/4W | | |
| R 3 | CF,(ARD25T111J) | 110Ω,±5%,1/4W | | |
| R 4 | CF,(ARD25T111J) | 110Ω,±5%,1/4W | | |
| R 5 | CF,(ARD25T181J) | 180Ω,±5%,1/4W | | |
| R 6 | CF,(ARD25T181J) | 180Ω,±5%,1/4W | | |
| R 7 | CF,(ARD25T181J) | 180Ω,±5%,1/4W | | |
| R 8 | CF,(ARD25T181J) | 180Ω,±5%,1/4W | | |
| R 9 | Single-in, line type, array,(IHR-4-681JA) | 680Ω×4,±5%,1/8W | | |
| R 10 | CF,(ARD25T111J) | 110Ω,±5%,1/4W | | |
| R 11 | CF,(ARD25T181J) | 180Ω,±5%,1/4W | | |
| R 12 | CF,(ARD25T122J) | 1.2kΩ,±5%,1/4W | | |
| R 13 | CF,(ARD25T272J) | 2.7kΩ,±5%,1/4W | | |
| R 14 | Var, MF(RJ-6P 2kΩ) | Max.2kΩ | | * |
| R 15 | CF,(ARD25T510J) | 51Ω,±5%,1/4W | | |
| R 16 | CF,(ARD25T102J) | 1kΩ,±5%,1/4W | | |
| R 17 | Single-in, line type, array,(IHR-4-471JA) | 470Ω×4,±5%,1/8W | | |
| R 18 | Single-in, line type, array,(IHR-4-471JA) | 470Ω×4,±5%,1/8W | | |
| R 19 | Single-in, line type, array,(IHR-8-681JA) | 680Ω×8,±5%,1/8W | | |
| R 20 | CF,(ARD25T221J) | 220Ω,±5%,1/4W | | |
| R 21 | CF,(ARD25T221J) | 220Ω,±5%,1/4W | | |
| R 22 | CF,(ARD25T271J) | 270Ω,±5%,1/4W | | |
| R 23 | CF,(ARD25T271J) | 270Ω,±5%,1/4W | | |
| R 24 | CF,(ARD25T221J) | 220Ω,±5%,1/4W | | |
| R 25 | CF,(ARD25T221J) | 220Ω,±5%,1/4W | | |
| R 26 | CF,(ARD25T271J) | 270Ω,±5%,1/4W | | |
| R 27 | CF,(ARD25T271J) | 279Ω,±5%,1/4W | | |
| R 28 | CF,(ARD25T391J) | 390Ω,±5%,1/4W | | |
| R 29 | CR,(ARD25T391J) | 390Ω,±5%,1/4W | | |
| R 30 | CF,(ARD25T391J) | 390Ω,±5%,1/4W | | |
| R 31 | CF,(ARD25T391J) | 390Ω,±5%,1/4W | | |
| R 32 | CF,(ARD25T681J) | 680Ω,±5%,1/4W | | |
| R 33 | CF,(ARD25T681J) | 680Ω,±5%,1/4W | | |
| R 34 | CF,(ARD25T681J) | 680Ω,±5%,1/4W | | |
| R 35 | CF,(ARD25T681J) | 680Ω,±5%,1/4W | | |
| R 36 | CF,(ARD25T151J) | 150Ω,±5%,1/4W | | |
| R 37 | CF,(ARD25T151J) | 150Ω,±5%,1/4W | | |
| R 38 | CF,(ARD25T151J) | 150Ω,±5%,1/4W | | |
| R 39 | CF,(ARD25T151J) | 150Ω,±5%,1/4W | | |
| R 40 | CF,(ARD25T151J) | 150Ω,±5%,1/4W | | |
| R 41 | CF,(ARD25T151J) | 150Ω,±5%,1/4W | | |
| R 42 | CF,(ARD25T151J) | 150Ω,±5%,1/4W | | |
| R 43 | CF,(ARD25T151J) | 150Ω,±5%,1/4W | | |
| R 44 | CF,(ARD25R181J) | 180Ω,±5%,1/4W | | |
| R 45 | Var,MF,(RJ-6P 100Ω) | Max.100Ω | | * |

( ): Manufacturer's part number

* : Selected at factory

| CKT REF | DESCRIPTION | RATING | | NOTE |
|---|---|---|---|---|
| R 46 | CF,(ARD25T151J) | 150Ω,±5%,1/4W | | |
| R 47 | CF,(ARD25T122J) | 1.2kΩ,±5%,1/4W | | |
| R 48 | Not assigned | | | |
| R 49 | Not assigned | | | |
| R 50 | CF,(ARD25T*J) | 10Ω to 1kΩ,±5%,1/4W | | Q'ty 0 to 3,* |
| R 51 | CF,(ARD25T151J) | 150Ω,±5%,1/4W | | |
| R 52 | Var,MF,(RJ-6P 500Ω) | Max,500Ω | | * |
| R 53 | CF,(ARD25T331J) | 330Ω,±5%,1/4W | | |
| R 54 | CF,(ARD25T152J) | 1.5kΩ,±5%,1/4W | | |
| R 55 | Not assigned | | | |
| R 56 | Not assigned | | | |
| R 57 | CF,(ARD25T*J) | 10Ω to 1kΩ,±5%,1/4W | | Q'ty 0 to 3,* |
| R 58 | CF,(ARD25T181J) | 180Ω,±5%,1/4W | | |
| R 59 | Var,MF,(RJ-6P 100Ω) | Max.100Ω | | * |
| R 60 | CF,(ARD25T151J) | 150Ω,±5%,1/4W | | |
| R 61 | CF,(ARD25T122J) | 1.2kΩ,±5%,1/4W | | |
| R 62 | Not assigned | | | |
| R 63 | Not assigned | | | |
| R 64 | CF,(ARD25T*J) | 10Ω to 1kΩ,±5%,1/4 | | Q'ty 0 to 3,* |
| R 65 | CF,(ARD25T151J) | 150Ω,±5%,1/4W | | |
| R 66 | Var,MF,(RJ-6P 500Ω) | Max.500Ω | | * |
| R 67 | CF,(ARD25T331J) | 330Ω,±5%,1/4W | | |
| R 68 | CF,(ARD25T152J) | 1.5kΩ,±5%,1/4W | | |
| R 69 | Not assigned | | | |
| R 70 | Not assigned | | | |
| R 71 | CF,(ARD25T*J) | 10Ω to 1kΩ,±5%,1/4W | | Q'ty 0 to 3,* |
| R 72 | Not assigned | | | |
| R 73 | CF,(ARD25T221J) | 220Ω,±5%,1/4W | | |
| R 74 | MF,(RN14K2E2260D) | 226Ω,±0.5%,1/4W | | |
| R 75 | MF,(RN14K2E2260D) | 226Ω,±0.5%,1/4W | | |
| R 76 | MF,(RN14K2E56R2D) | 56.2Ω,±0.5%,1/4W | | |
| R 77 | CF,(ARD25T221J) | 220Ω,±5%,1/4W | | |
| R 78 | MF,(RN14K2E2260D) | 226Ω,±0.5%,1/4W | | |
| R 79 | MF,(RN14K2E2260D) | 226Ω,±0.5%,1/4W | | |
| R 80 | MF,(RN14K2E56R2D) | 56.2Ω,±0.5%,1/4W | | |
| R 81 | CF,(ARD25T222J) | 2.2kΩ,±5%,1/4W | | |
| R 82 | CF,(RD1/4PX0.87ΩJ) | 0.87Ω,±5%,1/4W | | |
| R 83 | CF,(RD1/4PX0.37ΩJ) | 0.87Ω,±5%,1/4W | | |
| R 84 | Not assigned | | | |
| R 85 | Not assigned | | | |

( ): Manufacturer's part number

* : Selected at factory

| CKT REF | DESCRIPTION | RATING | | NOTE |
|---|---|---|---|---|
| R 86 | CF,(ARD25T680J) | 68Ω,±5%,1/4W | | |
| R 87 | CF,(ARD25T222J) | 2.2kΩ,±5%,1/4W | | |
| R 88 | CF,(ARD25T100J) | 10Ω,±5%,1/4W | | |
| R 89 | CF,(ARD25T220J) | 22Ω,±5%,1/4W | | |
| R 90 | CF,(ARD25T105J) | 1MΩ,±5%,1/4W | | |
| R 91 | CF,(ARD25T332J) | 3.3kΩ,±5%,1/4W | | |
| R 92 | Var, MF(RJ-6P 1kΩ) | Max.1kΩ | | |
| R 93 | CF,(ARD25T821J) | 820Ω,±5%,1/4W | | |
| R 94 | CF,(ARD25T680J) | 68Ω,±5%,1/4W | | |
| R 95 | CF,(ARD25T102J) | 1kΩ,±5%,1/4W | | |
| R 96 | CF,(ARD25T100J) | 10Ω,±5%,1/4W | | |
| R 97 | CF,(ARD25T220J) | 22Ω,±5%,1/4W | | |
| R 98 | CF,(ARD25T105J) | 1MΩ,±5%,1/4W | | |
| R 99 | CF,(ARD25T332J) | 3.3kΩ,±5%,1/4W | | |
| R100 | Var,MF,(RJ-6P 1kΩ) | Max.1kΩ | | |
| R101 | CF,(ARD25T152J) | 1.5kΩ,±5%,1/4W | | |
| R102 | CF,(ARD25T105J) | 1MΩ,±5%,1/4W | | |
| R103 | CF,(ARD25T332J) | 3.3kΩ,±5%,1/4W | | |
| R104 | CF,(ARD25T102J) | 1kΩ,±5%,1/4W | | |
| S 1 | Pushbutton,(44S67752) | | | |
| S 2 | Pushbutton,(1F2UEE) | | | |

140

( ): Manufacturer's part number

* : Selected at factory

C.L. OF CLOCK GENERATING CIRCUIT

| CKT REF | DESCRIPTION | RATING | | NOTE |
|---|---|---|---|---|
| C 1 | Cer,(CC924CH1H*J) | 220 to 470pF,±5%,50V | | * |
| C 2 | Cer,(CC924CH1H*J) | 220 to 470pF,±5%,50V | | |
| C 3 | Cer,(CC924CH1H*J) | 12 to 100pF,±5%,50V | | Q'ty 1 to 3,* |
| C 4 | Var,Cer,(TZ03R200A) | Max.20pF,100V | | * |
| C 5 | Cer,(CC924CH1H*J) | 220 to 470pF,±5%,50V | | * |
| C 6 | Cer,(CC924CH1H*J) | 220 to 470pF,±5%,50V | | * |
| C 7 | Cer,(CC924CH1H*J) | 12 to 100pF,±5%,50V | | Q'ty 1 to 3,* |
| C 8 | Var,Cer,(TZ03R200A) | Max.20pF,100V | | * |
| C 9 | Cer,(CK924C1H472M) | 4700pF,±20%,50V | | |
| C 10 | Cer,(CK924C1H472M) | 4700pF,±20%,50V | | |
| C 11 | Cer,(CK924F1H104Z) | 0.1μF,+80/-20%,50V | | |
| C 12 | Cer,(CK924F1H104Z) | 0.1μF,+80/-20%,50V | | |
| C 13 | Cer,(CK924F1H104Z) | 0.1μF,+80/-20%,50V | | |
| C 14 | Cer,(CK924F1H104Z) | 0.1μF,+80/-20%,50V | | |
| J 1 | Connector,(U-PB1521) | | | STANDARD |
| J 2 | Connector,(U-PB1519) | | | OPTION |
| Q 1 | IC,(HD74S00) | | | |
| Q 2 | IC,(74LS161) | | | |
| Q 3 | IC,(74LS161) | | | |
| Q 4 | IC,(HD10131) | | | |
| Q 5 | IC,(HD10124) | | | |
| R 1 | CF,(ARD25T*J) | 1k to 10kΩ,±5%,1/4W | | * |
| R 2 | CF,(ARD25T*J) | 1k to 10kΩ,±5%,1/4W | | * |
| R 3 | CF,(ARD25T*J) | 1k to 10kΩ,±5%,1/4W | | * |
| R 4 | CF,(ARD25T*J) | 1k to 10kΩ,±5%,1/4W | | * |
| R 5 | CF,(ARD25T101J) | 100Ω,±5%,1/4W | | |
| R 6 | CF,(ARD25T101J) | 100Ω,±5%,1/4W | | |
| R 7 | CF,(ARD25T392J) | 3.9kΩ,±5%,1/4W | | |
| R 8 | CF,(ARD25T392J) | 3.9kΩ,±5%,1/4W | | |
| R 9 | CF,(ARD25T153J) | 15kΩ,±5%,1/4W | | |
| R 10 | CF,(ARD25T153J) | 15kΩ,±5%,1/4W | | |
| R 11 | CF,(ARD25T511J) | 510Ω,±5%,1/4W | | |
| R 12 | CF,(ARD25T511J) | 510Ω,±5%,1/4W | | |
| R 13 | CF,(ARD25T511J) | 510Ω,±5%,1/4W | | |
| R 14 | CF,(ARD25T511J) | 510Ω,±5%,1/4W | | |
| X 1 | XTAL Unit,(44X68612 ) | | | |
| X 2 | XTAL Unit,(44X68612 ) | | | |

( ): Manufacturer's part number

* : Selected at factory

C.L. OF CLOCK GENERATING CIRCUIT

| CKT REF | DESCRIPTION | RATING | | NOTE |
|---|---|---|---|---|
| Z 1 | XTAL Unit,(44X6737l ) | | | |
| Z 2 | XTAL Unit,(44X6737l ) | | | |

( ): Manufacturer's part number

* : Selected at factory

C.B. OF UNIPOLAR OUTPUT CIRCUIT(0/+2.4V)

| CKT REF | DESCRIPTION | RATING | | NOTE |
|---|---|---|---|---|
| C 1 | Elect,(CE04C1C330) | 33 F,+100/-10%,16V | | |
| C 2 | Elect,(CE04C1C330) | 33 F,+100/-10%,16V | | |
| C 3 | Cer,(CK924F1H104Z) | 0.1 F,+80/-20%,50V | | |
| C 4 | Cer,(CK924F1H104Z) | 0.1 F,+80/-20%,50V | | |
| J 1 | Connector,(U-PB1519) | | | |
| J 2 | Receptacle,(3C-R) | | | |
| J 3 | Receptacle,(3C-R) | | | |
| J 4 | Receptacle,(3C-R) | | | |
| J 5 | Receptacle,(3C-R) | | | |
| J 6 | Receptacle,(3C-R) | | | |
| J 7 | Receptacle,(3C-R) | | | |
| Q 1 | IC,(HD10125) | | | |
| Q 2 | IC,(HD10125) | | | |
| Q 3 | IC,(HD74S175) | | | |
| Q 4 | IC,(HD74S03) | | | |
| Q 5 | IC,(HD75451AP) | | | |
| Q 6 | Di,Si,(1S953) | | | |
| Q 7 | Di,Si,(1S953) | | | |
| Q 8 | Di,Si,(1S953) | | | |
| Q 9 | Di,Si,(1S953) | | | |
| Q 10 | Di,Si,(1S953) | | | |
| Q 11 | Di,Si,(1S953) | | | |
| Q 12 | Tr,Si,NPN,(2SC1907) | | | |
| Q 13 | Tr,Si,NPN,(2SC1907) | | | |
| Q 14 | Tr,Si,NPN,(2SC1907) | | | |
| Q 15 | Tr,Si,NPN,(2SC1907) | | | |
| Q 16 | Tr,Si,NPN,(2SC1907) | | | |
| Q 17 | Tr,Si,NPN,(2SC1907) | | | |
| R 1 | Sinle-in, line type, array,(IHR-4-681JA) | 680Ω×4,±5%,1/8W | | |
| R 2 | Single-in, line type, array,(IHR-4-332JA) | 3.3kΩ×4,±5%,1/8W | | |
| R 3 | Single-in, line type, array,(IHR-4-471JA) | 470Ω×4,±5%,1/8W | | |
| R 4 | Single-in, line type, array,(IHR-4-222JA) | 2.2kΩ×4,±5%,1/8W | | |
| R 5 | CF,(ARD25T111J) | 110Ω,±5%,1/4W | | |
| R 6 | CF,(ARD25T181J) | 180Ω,±5%,1/4W | | |
| R 7 | CF,(ARD25T332J) | 3.3kΩ,±5%,1/4W | | |
| R 8 | CF,(ARD25T332J) | 3.3kΩ,±5%,1/4W | | |
| R 9 | CF,(ARD25T471J) | 470Ω,±5%,1/4W | | |
| R 10 | CF,(ARD25T471J) | 470Ω,±5%,1/4W | | |

( ): Manufacturer's part number

* : Selected at factory

C.L. OF UNIPOLAR OUTPUT CIRCUIT(0/+2.4V)

| CKT REF | DESCRIPTION | RATING | | NOTE |
|---|---|---|---|---|
| R 11 | CF,(ARD25T221J) | 220Ω,±5%,1/4W | | |
| R 12 | CF,(ARD25T221J) | 220Ω,±5%,1/4W | | |
| R 13 | CF,(ARD25T221J) | 220Ω,±5%,1/4W | | |
| R 14 | CF,(ARD25T221J) | 220Ω,±5%,1/4W | | |
| R 15 | CF,(ARD25T221J) | 220Ω,±5%,1/4W | | |
| R 16 | CF,(ARD25T221J) | 220Ω,±5%,1/4W | | |
| R 17 | CF,(ARD25T152J) | 1.5kΩ,±5%,1/4W | | |
| R 18 | CF,(ARD25T152J) | 1.5kΩ,±5%,1/4W | | |
| R 19 | CF,(ARD25T330J) | 33Ω,±5%,1/4W | | |
| R 20 | CF,(ARD25T330J) | 33Ω,±5%,1/4W | | |
| R 21 | CF,(ARD25T330J) | 33Ω,±5%,1/4W | | |
| R 22 | CF,(ARD25T330J) | 33Ω,±5%,1/4W | | |
| R 23 | CF,(ARD25T330J) | 33Ω,±5%,1/4W | | |
| R 24 | CF,(ARD25T330J) | 33Ω,±5%,1/4W | | |

142

( ): Manufacturer's part number

* : Selected at factory

C.B. OF UNIPOLAR PATTERN OUTPUT CIRCUIT(0/+3V)

| CKT REF | DESCRIPTION | RATING | | NOTE |
|---|---|---|---|---|
| C 1 | Elect,(CE04C1C330) | 33μF,+100/-10%,16V | | |
| C 2 to C 12 | Cer,(CK924F1H104Z) | 0.1μF,+80/-20%,50V | | |
| J 1 | Connector,(U-PB1519) | | | |
| J 2 | Receptacle,(3C-R) | | | |
| J 3 | Receptacle,(3C-R) | | | |
| J 4 | Receptacle,(3C-R) | | | |
| J 5 | Receptacle,(3C-R) | | | |
| J 6 | Receptacle,(3C-R) | | | |
| J 7 | Receptacle,(3C-R) | | | |
| Q 1 | IC,(HD10131) | | | |
| Q 2 | IC,(HD10131) | | | |
| Q 3 | IC,(HD10101) | | | |
| Q 4 | IC,(HD10105) | | | |
| Q 5 | IC,(HD10105) | | | |
| Q 6 to Q 17 | Tr,Si,PNP,(2SA711K) | | | |
| Q 18 to Q 41 | Tr,Si,PNP,(2SA1161) | | | |
| Q 42 to Q 53 | Di, breakdown, (RD4.3EB(3)) | 4.0 to 4.5V,400mW | | |
| R 1 | Single-in, line type, array,(IHR-8-681JA) | 680Ω×8,±5%,1/8W | | |
| R 2 | CF,(ARD25T111J) | 110Ω,±5%,1/4W | | |
| R 3 | CF,(ARD25T181J) | 180Ω,±5%,1/4W | | |
| R 4 | Single-in, line type, array,(IHR-8-681JA) | 680Ω×8,±5%,1/8W | | |
| R 5 | Single-in, line type, array,(IHR-i-681JA) | 680Ω×8,±5%,1/8W | | |
| R 6 to R 17 | CF,(ARD25T221J) | 220Ω,±5%,1/4W | | |
| R 18 | Single-in, line type, array,(IHR-4-391JA) | 390Ω×4,±5%,1/8W | | |
| R 19 | Single-in, line type, array,(IHR-4-391JA) | 390Ω×4,±5%,1/8W | | |
| R 20 | Single-in, line type, array,(IHR-4-391JA) | 390Ω×4,±5%,1/8W | | |

( ): Manufacturer's part number

* : Selected at factory

C.L. OF UNIPOLAR PATTERN OUTPUT CIRCUIT(0/+3V)

| CKT REF | DESCRIPTION | RATING | | NOTE |
|---|---|---|---|---|
| R 21 to R 32 | CF,(ARD25T101J) | 100Ω,±5%,1/4W | | |
| R 33 | CF,(ARD25T330J) | 33Ω,±5%,1/4W | | |
| R 34 | CF,(ARD25T330J) | 33Ω,±5%,1/4W | | |
| R 35 | CF,(ARD25T330J) | 33Ω,±5%,1/4W | | |
| R 36 | CF,(ARD25T330J) | 33Ω,±5%,1/4W | | |
| R 37 | CF,(ARD25T330J) | 33Ω,±5%,1/4W | | |
| R 38 | CF,(ARD25T330J) | 33Ω,±5%,1/4W | | |
| R 39 | Var,MF,(RJ-6P 100Ω) | Max.100Ω,1/2W | | |
| R 40 | Var,MF,(RJ-6P 100Ω) | Max.100Ω,1/2W | | |
| R 41 | Var,MF,(RJ-6P 100Ω) | Max.100Ω,1/2W | | |
| R 42 | Var,MF,(RJ-6P 100Ω) | Max.100Ω,1/2W | | |
| R 43 | Var,MF,(RJ-6P 100Ω) | Max.100Ω,1/2W | | |
| R 44 | Var,MF,(RJ-6P 100Ω) | Max.100Ω,1/2W | | |
| R 45 | CF,(ARD25T221J) | 220Ω,±5%,1/4W | | |
| R 46 | CF,(ARD25T221J) | 220Ω,±5%,1/4W | | |
| R 47 | CF,(ARD25T221J) | 220Ω,±5%,1/4W | | |
| R 48 | CF,(ARD25T221J) | 220Ω,±5%,1/4W | | |
| R 49 | CF,(ARD25T221J) | 220Ω,±5%,1/4W | | |
| R 50 | CF,(ARD25T221J) | 220Ω,±5%,1/4W | | |
| R 51 | CF,(ARD25T111J) | 110Ω,±5%,1/4W | | |
| R 52 | CF,(ARD25T181J) | 180Ω,±5%,1/4W | | |

113

( ): Manufacturer's part number

* : Selected at factory

C.L.OF BIPLAR OUTPUT CIRCUIT (UNBAL,24CH)

| CKT REF | DESCRIPTION | RATING | | NOTE |
|---|---|---|---|---|
| C 1 | Cer,(CK924F1H104Z) | 0.1μF,+80/-20%,50V | | |
| C 2 | Cer,(CK924F1H104Z) | 0.1μF,+80/-20%,50V | | |
| C 3 | Cer,(CK924F1H104Z) | 0.1μF,+80/-20%,50V | | |
| C 4 | Cer,(CK924F1H104Z) | 0.1μF,+80/-20%,50V | | |
| C 5 | Cer,(CK924F1H104Z) | 0.1μF,+80/-20%,50V | | |
| C 6 | Cer,(CK924F1H104Z) | 0.1μF,+80/-20%,50V | | |
| C 7 | Cer,(RPE114C105M50V) | 1μF,±20%,50V | | |
| C 8 | Cer,(RPE114C105M50V) | 1μF,±20%,50V | | |
| C 9 | Not assigned | | | |
| C 10 | Not assigned | | | |
| C 11 | Not assigned | | | |
| C 12 | Not assigned | | | |
| C 13 | Cer,(CK924F1H104Z) | 0.1μF,+80/-20%,50V | | |
| C 14 | Cer,(CK924F1H104Z) | 0.1μF,+80/-20%,50V | | |
| C 15 | Cer,(CK924F1H104Z) | 0.1μF,+80/-20%,50V | | |
| C 16 | Cer,(CK924F1H104Z) | 0.1μF,+80/-20%,50V | | |
| J 1 | Connector,(U-SA2201) | | | |
| J 2 | Receptacle,(3C-R) | | | |
| J 3 | Receptacle,(3C-R) | | | |
| K 1 | Relay,(RFT-122E-DC12) | | | |
| K 2 | Relay,(RFT-122E-DC12) | | | |
| L 1 | Coil,(44L63837B) | 0.04μH | | |
| L 2 | Coil,(44L63837B) | 0.04μH | | |
| Q 1 | IC,(HD10101) | | | |
| Q 2 | Tr,Si,PNP,(2SA711K) | | | |
| Q 3 | Tr,Si,PNP,(2SA711K) | | | |
| Q 4 | Tr,Si,PNP,(2SA1161) | | | |
| Q 5 | Tr,Si,PNP,(2SA1161) | | | |
| Q 6 | Tr,Si,PNP,(2SA1161) | | | |
| Q 7 | Tr,Si,PNP,(2SA1161) | | | |
| Q 8 | Tr,Si,NPN,(2SC1907) | | | |
| Q 9 | Tr,Si,NPN,(2SC1907) | | | |
| Q 10 | Tr,Si,NPN,(2SC2498) | | | |
| Q 11 | Tr,Si,NPN,(2SC2498) | | | |
| Q 12 | Tr,Si,PNP,(2SA711K) | | | |
| Q 13 | Tr,Si,PNP,(2SA711K) | | | |
| Q 14 | Tr,Si,PNP,(2SA1161) | | | |
| Q 15 | Tr,Si,PNP,(2SA1161) | | | |

( ): Manufacturer's part number

* : Selected at factory

| CKT REF | DESCRIPTION | RATING | | NOTE |
|---|---|---|---|---|
| Q 16 | Tr,Si,PNP,(2SA1161) | | | |
| Q 17 | Tr,Si,PNP,(2SA1161) | | | |
| Q 18 | Tr,Si,NPN,(2SC1907) | | | |
| Q 19 | Tr,Si,NPN,(2SC1907) | | | |
| Q 20 | Tr,Si,NPN,(2SC2498) | | | |
| Q 21 | Tr,Si,NPN,(2SC2498) | | | |
| Q 22 | Di,breakdown, (RD4.3E(3)) | 4.0 to 4.8V,400mW | | |
| Q 23 | Di,breakdown, (RD4.3E(3)) | 4.0 to 4.8V,400mW | | |
| Q 24 | Di,breakdown, (RD4.3E(3)) | 4.0 to 4.8V,400mW | | |
| Q 25 | Di,breakdown, (RD4.3E(3)) | 4.0 to 4.8V,400mW | | |
| Q 26 | Di,breakdown, (RD2.7E(3)) | 2.5 to 3.1V,400mW | | |
| Q 27 | Di,breakdown, (RD2.7E(3)) | 2.5 to 3.1V,400mW | | |
| Q 28 | Di,breakdown, (RD2.7E(3)) | 2.5 to 3.1V,400mW | | |
| Q 29 | Di,breakdown, (RD2.7E(3)) | 2.5 to 3.1V,400mW | | |
| Q 30 | Di,Si,(1S953) | | | |
| Q 31 | Di,Si,(1S953) | | | |
| R 1 | CF,(ARD25T111J) | 110Ω,±5%,1/4W | | |
| R 2 | CF,(ARD25T111J) | 110Ω,±5%,1/4W | | |
| R 3 | CF,(ARD25T111J) | 110Ω,±5%,1/4W | | |
| R 4 | CF,(ARD25T111J) | 110Ω,±5%,1/4W | | |
| R 5 | CF,(ARD25T181J) | 180Ω,±5%,1/4W | | |
| R 6 | CF,(ARD25T181J) | 180Ω,±5%,1/4W | | |
| R 7 | CF,(ARD25T181J) | 180Ω,±5%,1/4W | | |
| R 8 | CF,(ARD25T181J) | 180Ω,±5%,1/4W | | |
| R 9 | Single-in, line type, array,(IHR-8-681JA) | 680Ω×8,±5%,1/8W | | |
| R 10 | CF,(ARD25T221J) | 220Ω,±5%,1/4W | | |
| R 11 | CF,(ARD25T221J) | 220Ω,±5%,1/4W | | |
| R 12 | CF,(ARD25T271J) | 270Ω,±5%,1/4W | | |
| R 13 | CF,(ARD25T271J) | 270Ω,±5%,1/4W | | |
| R 14 | CF,(ARD25T221J) | 220Ω,±5%,1/4W | | |
| R 15 | CF,(ARD25T221J) | 220Ω,±5%,1/4W | | |
| R 16 | CF,(ARD25T271J) | 270Ω,±5%,1/4W | | |
| R 17 | CF,(ARD25T271J) | 270Ω,±5%,1/4W | | |
| R 18 | CF,(ARD25T391J) | 390Ω,±5%,1/4W | | |
| R 19 | CF,(ARD25T391J) | 390Ω,±5%,1/4W | | |
| R 20 | CF,(ARD25T391J) | 390Ω,±5%,1/4W | | |

( ): Manufacturer's part number

* : Selected at factory

| CKT REF | DESCRIPTION | RATING | | NOTE |
|---|---|---|---|---|
| R 21 | CF,(ARD25T391J) | 390Ω,±5%,1/4W | | |
| R 22 | CF,(ARD25T681J) | 680Ω,±5%,1/4W | | |
| R 23 | CF,(ARD25T681J) | 680Ω,±5%,1/4W | | |
| R 24 | CF,(ARD25T681J) | 680Ω,±5%,1/4W | | |
| R 25 | CF,(ARD25T681J) | 680Ω,±5%,1/4W | | |
| R 26 | CF,(ARD25T151J) | 150Ω,±5%,1/4W | | |
| R 27 | CF,(ARD25T151J) | 150Ω,±5%,1/4W | | |
| R 28 | CF,(ARD25T151J) | 150Ω,±5%,1/4W | | |
| R 29 | CF,(ARD25T151J) | 150Ω,±5%,1/4W | | |
| R 30 | CF,(ARD25T151J) | 150Ω,±5%,1/4W | | |
| R 31 | CF,(ARD25T151J) | 150Ω,±5%,1/4W | | |
| R 32 | CF,(ARD25T151J) | 150Ω,±5%,1/4W | | |
| R 33 | CF,(ARD25T151J) | 150Ω,±5%,1/4W | | |
| R 34 | CF,(ARD25T181J) | 180Ω,±5%,1/4W | | |
| R 35 | Var,MF(RJ-6P 100Ω) | Max.100Ω | | |
| R 36 | CF,(ARD25T151J) | 150Ω,±5%,1/4W | | |
| R 37 | CF,(ARD25T122J) | 1.2kΩ,±5%,1/4W | | |
| R 38 | Not assigned | | | |
| R 39 | Not assigned | | | |
| R 40 | CF,(ARD25T*J) | 10Ω to 1kΩ,±5%,1/4W | | Q'ty 0 to 3,* |
| R 41 | CF,(ARD25T151J) | 150Ω,±5%,1/4W | | |
| R 42 | Var MF,(RJ-6P 500Ω) | Max.500Ω | | |
| R 43 | CF,(ARD25T331J) | 330Ω,±5%,1/4W | | |
| R 44 | CF,(ARD25T152J) | 1.5kΩ,±5%,1/4W | | |
| R 45 | Not assigned | | | |
| R 46 | Not assigned | | | |
| R 47 | CF,(ARD25T*J) | 10Ω to 1kΩ,±5%,1/4W | | Q'ty 0 to 3,* |
| R 48 | CF,(ARD25T181J) | 180Ω,±5%,1/4W | | |
| R 49 | Var,MF,(RJ-6P 100Ω) | Max.100Ω | | |
| R 50 | CF,(ARD25T151J | 150Ω,±5%,1/4W | | |
| R 51 | CF,(ARD25T122J) | 1.2kΩ,±5%,1/4W | | |
| R 52 | Not assigned | | | |
| R 53 | Not assigned | | | |
| R 54 | CF,(ARD25T*J) | 10Ω to 1kΩ,±5%,1/4W | | Q'ty 0 to 3,* |
| R 55 | CF,(ARD25T151J) | 150Ω,±5%,1/4W | | |
| R 56 | Var,MF,(RJ-6P 500Ω) | Max.500Ω | | |
| R 57 | CF,(ARD25T331J) | 330Ω,±5%,1/4W | | |
| R 58 | CF,(ARD25T152J) | 1.5kΩ,±5%,1/4W | | |
| R 59 | Not assigned | | | |
| R 60 | Not assigned | | | |

( ): Manufacturer's part number

* : Selected at factory

| CKT REF | DESCRIPTION | RATING | | NOTE |
|---|---|---|---|---|
| R 61 | CF,(ARD25T*J) | 10Ω to 1kΩ,±5%,1/4W | | Q'ty 0 to 3,* |
| R 62 | CF,(ARD25T221J) | 220Ω,±5%,1/4W | | |
| R 63 | MF,(RN14K2E2260D) | 226Ω,±0.5%,1/4W | | |
| R 64 | MF,(RN14K2E2260D) | 226Ω,±0.5%,1/4W | | |
| R 65 | MF,(RN14K2E56R2D) | 56.2Ω,±0.5%,1/4W | | |
| R 66 | CF,(ARD25T221J) | 220Ω,±5%,1/4W | | |
| R 67 | MF,(RN14K2E2260D) | 226Ω,±0.5%,1/4W | | |
| R 68 | MF,(RN14K2E2260D) | 226Ω,±0.5%,1/4W | | |
| R 69 | MF,(RN14K2E56R2D) | 56.2Ω,±0.5%,1/4W | | |



( ): Manufacturer's part number

* : Selected at factory 6-167

C.L.OF BIPOLAR OUTPUT CIRCUIT (BAL,24CH)

| CKT REF | DESCRIPTION | RATING | | NOTE |
|---|---|---|---|---|
| C 1 | Cer,(CK924F1H104Z) | 0.1μF,+80/-20%,50V | | |
| C 2 | Cer,(CK924F1H104Z) | 0.1μF,+80/-20%,50V | | |
| C 3 | Cer,(CK924F1H104Z) | 0.1μF,+80/-20%,50V | | |
| C 4 | Cer,(CK924F1H104Z) | 0.1μF,+80/-20%,50V | | |
| C 5 | Elect,(CE04C1C330) | 33μF,+100/-10%,16V | | |
| C 6 | Elect,(CE04C1C330) | 33μF,+100/-10%,16V | | |
| C 7 | Elect,(CE04C1C330) | 33μF,+100/-10%,16V | | |
| C 8 | Elect,(CE04C1C330) | 33μF,+100/-10%,16V | | |
| J 1 | Connector,(U-SA2201) | | | |
| J 2 | Jack,(449J82011) | | | |
| J 3 | Jack,(449J82011) | | | |
| J 4 | Earth jack,(44B1849) | | | |
| J 5 | Earth jack,(44B1849) | | | |
| L 1 | Coil,(442T24374E) | 66.7μH | | |
| L 2 | Coil,(442T24374E) | 66.7μH | | |
| Q 1 | IC,(HD10125) | | | |
| Q 2 | IC,(74LS38) | | | |
| Q 3 | Di,Si,(1S953) | | | |
| Q 4 | Di,Si,(1S953) | | | |
| Q 5 | Di,Si,(1S953) | | | |
| Q 6 | Di,Si,(1S953) | | | |
| Q 7 | Tr,Si,NPN,(2SC2901) | | | |
| Q 8 | Tr,Si,NPN,(2SC2901) | | | |
| Q 9 | Tr,Si,NPN,(2SC2901) | | | |
| Q 10 | Tr,Si,NPN,(2SC2901) | | | |
| Q 11 | Tr,Si,NPN,(2SC2718) | | | |
| Q 12 | Tr,Si,NPN,(2SC2718) | | | |
| R 1 | Single-in, line type, array,(IHR-4-681JA) | 680Ω×4,±5%,1/8W | | |
| R 2 | Single-in, line type, array,(IHR-4-391JA) | 390Ω×4,±5%,1/8W | | |
| R 3 | Single-in, line type, array,(IHR-4-471JA) | 470Ω×4,±5%,1/8W | | |
| R 4 | CF,(ARD25T100J) | 10Ω,±5%,1/4W | | |
| R 5 | CF,(ARD25T100J) | 10Ω,±5%,1/4W | | |
| R 6 | CF,(ARD25T100J) | 10Ω,±5%,1/4W | | |
| R 7 | CF,(ARD25T100J) | 10Ω,±5%,1/4W | | |
| R 8 | CF,(ARD25T821J) | 820Ω,±5%,1/4W | | |
| R 9 | CF,(ARD25T182J) | 1.8kΩ,±5%,1/4W | | |
| R 10 | CF,(ARD25T333J) | 33kΩ,±5%,1/4W | | |

( ): Manufacturer's part number

* : Selected at factory

| CKT REF | DESCRIPTION | RATING | | NOTE |
|---|---|---|---|---|
| R 11 | CF,(ARD25T221J) | 220Ω,±5%,1/4W | | |
| R 12 | CF,(ARD25R681J) | 680Ω,±5%,1/4W | | |
| R 13 | CF,(ARD25T681J) | 680Ω,±5%,1/4W | | |
| R 14 | CF,(ARD25T821J) | 820Ω,±5%,1/4W | | |
| R 15 | CF,(ARD25T182J) | 1.8kΩ,±5%,1/4W | | |
| R 16 | CF,(ARD25T333J) | 33kΩ,±5%,1/4W | | |
| R 17 | CF,(ARD25T221J) | 220Ω,±5%,1/4W | | |
| R 18 | CF,(ARD25T681J) | 680Ω,±5%,1/4W | | |
| R 19 | CF,(ARD25T681J) | 680Ω,±5%,1/4W | | |
| R 20 | CF,(ARD25T751J) | 750Ω,±5%,1/4W | | |
| R 21 | CF,(ARD25T751J) | 750Ω,±5%,1/4W | | |
| R 22 | CF,(ARD25T222J) | 2.2kΩ,±5%,1/4W | | |
| R 23 | CF,(ARD25T222J) | 2.2kΩ,±5%,1/4W | | |
| R 24 | CF,(ARD25T121J) | 120Ω,±5%,1/4W | | |
| R 25 | CF,(ARD25T121J) | 120Ω,±5%,1/4W | | |
| S 1 | Pushbutton,(1F2UEE) | | | |
| T 1 | Trans,(439T23519) | | | |
| T 2 | Trans,(439T23519) | | | |

( ): Manufacturer's part number

* : Selected at factory

| CKT REF | DESCRIPTION | RATING | NOTE |
|---|---|---|---|
| G 1 | Fan,(FB08B3MP12) | | |
| J 1 | Receptacle,(3C-R) | | |
| J 2 | Connector,(PI011-2F) | | |
| J 3 | Connector,(U-SA1003) | | |
| J 4 | Terminal,(34E772) | | |
| J 5 | Connector,(PI011-2F) | | |
| J 6 | Connector,(U-SA1003) | | |
| J 7 | Connector,(CN1208DJMS) | | |
| J 8 | AC Inlet,(44J69939) | | with fuse |
| S 1 | Pushbutton, (NE-15J(2)-2U) | | |
| S 2 | Toggle,(SE2011) | | |
| T 1 | Power trans,(44T67692) | | |

( ): Manufacturer's part number

* : Selected at factory

| CKT REF | DESCRIPTION | RATING | NOTE |
|---|---|---|---|
| Z 1 | 442U67722P.C.Board CLOCK GENERATING CIRCUIT | | 44W69549 |
| Z 2 | 422U8906P.C.Board PATTERN GENERATING CIRCUIT | | 44W69544 |
| Z 3 | 442U67730P.C.Board UNIPOLAR OUTPUT CIRCUIT(ECL) | STANDARD | 44W69545 |
| | 442U69093P.C.Board UNIPOLAR OUTPUT CIRCUIT(0/+2.4V) | OPTION31 | 44W69551 *1) |
| | 442U67732P.C.Board UNIPOLAR OUTPUT CIRCUIT(0/+3V) | OPTION32 | 44W69551 |
| | UNIPOLAR OUTPUT CIRCUIT(RZ 0/+3V) | OPTION33 | |
| Z 4 | 442U67724P.C.Board MOTHER BOARD CIRCUIT | | 44W69546 |
| Z 5 | 422U8908 P.C.Board BIPOLAR OUTPUT CIRCUIT | | 44W69814 |
| Z 6 | 442U67722P.C.Board CLOCK GENERATING CIRCUIT | OPTION11 or 12 | 44W69549 Q'ty 0 or 1,*2) |
| Z 7 | 442U67726P.C.Board BIPOLAR OUTPUT CIRCUIT(UNBAL,24CH) | OPTION21 | 44W69815 Q'ty 0 or 1,*3) |
| | 442U67728P.C.Board BIPOLAR OUTPUT CIRCUIT(BAL,24CH) | OPTION22 | 44W69816 Q'ty 0 or 1,*3) |
| Z 8 | Noise filter, (ZMB2203-13) | | |

* 1) Only one of four P.C. Boards is mounted.
* 2) Mounted only when option 11 or 12 was specified.
* 3) Mounted only when option 21 or 22 was specified.

( ): Manufacturer's part number
* : Selected at factory

C.L. OF BIPOLAR OUTPUT CIRCUIT (WITH OPTION45, 24CH)

| CKT REF | DESCRIPTION | RATING | | NOTE |
|---|---|---|---|---|
| C 1 | Cer,(CK924F1H104Z) | 0.1μF,+80/-20%,50V | | |
| C 2 | Cer,(CK924F1H104Z) | 0.1μF,+80/-20%,50V | | |
| C 3 | Cer,(CK924F1H104Z) | 0.1μF,+80/-20%,50V | | |
| C 4 | Cer,(CK924F1H104Z) | 0.1μF,+80/-20%,50V | | |
| C 5 | Cer,(CK924F1H104Z) | 0.1μF,+80/-20%,50V | | |
| C 6 | Cer,(CK924F1H104Z) | 0.1μF,+80/-20%,50V | | |
| C 7 | Cer,(RPE114C105M50V) | 1μF,±20%,50V | | |
| C 8 | Cer,(RPE114C105M50V) | 1μF,±20%,50V | | |
| C 9 | Cer,(CK924F1H104Z) | 0.1μF,+80/-20%,50V | | |
| C 10 | Cer,(CK924F1H104Z) | 0.1μF,+80/-20%,50V | | |
| C 11 | Not assigned | | | |
| C 12 | Not assigned | | | |
| C 13 | Cer,(CK924F1H104Z) | 0.1μF,+80/-20%,50V | | |
| C 14 | Cer,(CK924F1H104Z) | 0.1μF,+80/-20%,50V | | |
| C 15 | Cer,(CK924F1H104Z) | 0.1μF,+80/-20%,50V | | |
| C 16 | Cer,(CK924F1H104Z) | 0.1μF,+80/-20%,50V | | |
| C 17 | Cer,(CK924F1H104Z) | 0.1μF,+80/-20%,50V | | |
| C 18 | Cer,(CK924F1H104Z) | 0.1μF,+80/-20%,50V | | |
| C 19 | Cer,(CK924F1H104Z) | 0.1μF,+80/-20%,50V | | |
| C 20 | Cer,(CK924F1H104Z) | 0.1μF,+80/-20%,50V | | |
| C 21 | Not assigned | | | |
| C 22 | Not assigned | | | |
| C 23 | Not assigned | | | |
| C 24 | Not assigned | | | |
| C 25 | Elect,(CE02W1J102) | 1000μF,+100/-10%,63V | | |
| C 26 | Elect,(CE02W1J332) | 3300μF,+100/-10%,63V | | |
| C 27 | Not assigned | | | |
| C 28 | Elect,(CE02W1J102) | 1000μF,+100/-10%,63V | | |
| C 29 | Elect,(CE02C1V471) | 470μF,+100/-10%,35V | | |
| C 30 | Elect,(CE02C1V471) | 470μF,+100/-10%,35V | | |
| C 31 | Plast,(ECQ-M1H 103KZ) | 0.01μF,±10%,50V | | |
| C 32 | Plast,(ECQ-M1H 103KZ) | 0.01μF,±10%,50V | | |
| C 33 | Plast,(ECQ-M1H 104KZ) | 0.1μF,±10%,50V | | |
| C 34 | Plast,(ECQ-M1H 104KZ) | 0.1μF,±10%,50V | | |
| C 35 | Elect,(CE04C1E101) | 100μF,+100/-10%,25V | | |
| C 36 | Elect,(CE04C1E101) | 100μF,+100/-10%,25V | | |
| C 37 | Elect,(CE04W1E101) | 100μF,+100/-10%,25V | | |
| C 38 | Elect,(CE04W1A101) | 100μF,+100/-10%,10V | | |
| C 39 | Elect,(CE04W1A101) | 100μF,+100/-10%,10V | | |
| C 40 | Elect,(CE04W1E101) | 100μF,+100/-10%,25V | | |
| F 1 | Fuse, (MF51NN250V1.6ADC01) | 1.6A | | |
| F 2 | Fuse, (MF51NN250V3.15ADC01) | 3.15A | | |
| F 3 | Fuse, (MF51NN250V0.8ADC01) | 0.8A | | |

( ): Manufacturer's part number

* : Selected at factory

| CKT REF | DESCRIPTION | RATING | | NOTE |
|---|---|---|---|---|
| J 1 | Connector,(U-SB2201) | | | |
| J 2 | Connector,(U-PB2221) | | | |
| J 3 | Connector,(U-PA1019) | | | |
| J 4 | Receptacle,(3C-R) | | | |
| J 5 | Receptacle,(3C-R) | | | |
| J 6 | Connector,(PI011-2M) | | | |
| J 7 | Connector,(U-PA1019) | | | |
| K 1 | Relay,(RFT-122E-DC12) | | | |
| K 2 | Relay,(RFT-122E-DC12) | | | |
| K 3 | Relay,(SF-102) | | | |
| K 4 | Relay,(G2L-113P-V(12V)) | | | |
| L 1 | Coil,(SKC-105B) | 200μH | | |
| L 2 | Coil,(44T46058D) | 100μH | | |
| L 3 | Coil,(SKC-105B) | 200μH | | |
| L 4 | Coil,(449T46058D) | 100μH | | |
| L 5 | Coil,(44L63837B) | 0.04μH | | |
| L 6 | Coil,(44L63837B) | 0.04μH | | |
| M 1 | Timer,(TM-0) | 5000H | | |
| Q 1 | IC,(HD10102) | | | |
| Q 2 | IC,(HD10109) | | | |
| Q 3 | IC,(HD10109) | | | |
| Q 4 | IC,(HD10116) | | | |
| Q 5 | IC,(HD10101) | | | |
| Q 6 | Tr,Si,PNP,(2SA711K) | | | |
| Q 7 | Tr,Si,PNP,(2SA711K) | | | |
| Q 8 | Tr,Si,PNP,(2SA1161) | | | |
| Q 9 | Tr,Si,PNP,(2SA1161) | | | |
| Q 10 | Tr,Si,PNP,(2SA1161) | | | |
| Q 11 | Tr,Si,PNP,(2SA1161) | | | |
| Q 12 | Tr,Si,NPN,(2SC1907) | | | |
| Q 13 | Tr,Si,NPN,(2SC1907) | | | |
| Q 14 | Tr,Si,NPN,(2SC2498) | | | |
| Q 15 | Tr,Si,NPN,(2SC2498) | | | |
| Q 16 | Tr,Si,PNP,(2SA711K) | | | |
| Q 17 | Tr,Si,PNP,(2SA711K) | | | |
| Q 18 | Tr,Si,PNP,(2SA1161) | | | |
| Q 19 | Tr,Si,PNP,(2SA1161) | | | |
| Q 20 | Tr,Si,PNP,(2SA1161) | | | |

( ): Manufacturer's part number

* : Selected at factory

C.L. OF BIPOLAR OUTPUT CIRCUIT (WITH OPTION45, 24CH)

| CKT REF | DESCRIPTION | RATING | NOTE |
|---|---|---|---|
| Q 21 | Tr,Si,PNP,(2SA1161) | | |
| Q 22 | Tr,Si,NPN,(2SC1907) | | |
| Q 23 | Tr,Si,NPN,(2SC1907) | | |
| Q 24 | Tr,Si,NPN,(2SC2498) | | |
| Q 25 | Tr,Si,NPN,(2SC2498) | | |
| Q 26 | Di,breakdown, (RD4.3E(3)) | 4.0 to 4.8V,400mW | |
| Q 27 | Di,breakdown, (RD4.3E(3)) | 4.0 to 4.8V,400mW | |
| Q 28 | Di,breakdown, (RD4.3E(3)) | 4.0 to 4.8V,400mW | |
| Q 29 | Di,breakdown, (RD4.3E(3)) | 4.0 to 4.8V,400mW | |
| Q 30 | Di,breakdown, (RD2.7E(3)) | 2.5 to 3.1V,400mW | |
| Q 31 | Di,breakdown, (RD2.7E(3)) | 2.5 to 3.1V,400mW | |
| Q 32 | Di,breakdown, (RD2.7E(3)) | 2.5 to 3.1V,400mW | |
| Q 33 | Di,breakdown, (RD2.7E(3)) | 2.5 to 3.1V,400mW | |
| Q 34 | Di,Si,(1S953) | | |
| Q 35 | Di,Si,(1S953) | | |
| Q 36 | Di,Si,(1S953) | | |
| Q 37 | Not assigned | | |
| Q 38 | Not assigned | | |
| Q 39 | Not assigned | | |
| Q 40 | Not assigned | | |
| Q 41 | Rectifier,(RB-402-LED) | | |
| Q 42 | Rectifier,(M4C-52-12) | | |
| Q 43 | Rectifier stack, (RB-152LFB) | | |
| Q 44 | Tr,Si,PNP,(2SA708L) | | |
| Q 45 | Tr,Si,NPN,(2SC1343 H ) | | |
| Q 46 | Di,Si,(S5S4) | | |
| Q 47 | Di,breakdown,(RD5.1E) | 4.8 to 5.7V,400mW | |
| Q 48 | IC,(μPC141A) | | |
| Q 49 | Di,breakdown,(RD9.1E) | 8.5 to 10.2V,400mW | |
| Q 50 | Tr,Si,PNP,(2SA708L) | | |
| Q 51 | Tr,Si,NPN,(2SC1343 H ) | | |
| Q 52 | Di,Si,(S10SC4) | | |
| Q 53 | Di,breakdown,(RD5.1E) | 4.8 to 5.7V,400mW | |
| Q 54 | IC,(μPC141A) | | |
| Q 55 | Di,breakdown,(RD6.2E) | 5.8 to 7.0V,400mW | |
| Q 56 | IC,(μPC14305H) | | |
| Q 57 | IC,(MC7912CK) | | |
| Q 58 | Di,Si,(1S953) | | |
| Q 59 | Di,Si,(1S953) | | |

( ): Manufacturer's part number

* : Selected at factory

| CKT REF | DESCRIPTION | RATING | | NOTE |
|---|---|---|---|---|
| R 1 | CF,(ARD25T111J) | 110Ω,±5%,1/4W | | |
| R 2 | CF,(ARD25T111J) | 110Ω,±5%,1/4W | | |
| R 3 | CF,(ARD25T111J) | 110Ω,±5%,1/4W | | |
| R 4 | CF,(ARD25T111J) | 110Ω,±5%,1/4W | | |
| R 5 | CF,(ARD25T181J) | 180Ω,±5%,1/4W | | |
| R 6 | CF,(ARD25T181J) | 180Ω,±5%,1/4W | | |
| R 7 | CF,(ARD25T181J) | 180Ω,±5%,1/4W | | |
| R 8 | CF,(ARD25T181J) | 180Ω,±5%,1/4W | | |
| R 9 | Single-in, line type, array,(IHR-4-681JA) | 680Ω×4,±5%,1/8W | | |
| R 10 | CF,(ARD25T111J) | 110Ω,±5%,1/4W | | |
| R 11 | CF,(ARD25T181J) | 180Ω,±5%,1/4W | | |
| R 12 | CF,(ARD25T122J) | 1.2kΩ,±5%,1/4W | | |
| R 13 | CF,(ARD25T272J) | 2.7kΩ,±5%,1/4W | | |
| R 14 | Var,MF,(RJ-6P 2kΩ) | Max.2kΩ | | |
| R 15 | CF,(ARD25T510J) | 51Ω,±5%,1/4W | | |
| R 16 | CF,(ARD25T102J) | 1kΩ,±5%,1/4W | | |
| R 17 | Single-in, line type, array,(IHR-4-471JA) | 470Ω×4,±5%,1/8W | | |
| R 18 | Single-in, line type, array,(IHR-4-471JA) | 470Ω×4,±5%,1/8W | | |
| R 19 | Single-in, line type, array,(IHR-8-681JA) | 680Ω×8,±5%,1/8W | | |
| R 20 | CF,(ARD25R221J) | 220Ω,±5%,1/4W | | |
| R 21 | CF,(ARD25R221J) | 220Ω,±5%,1/4W | | |
| R 22 | CF,(ARD25T271J) | 270Ω,±5%,1/4W | | |
| R 23 | CF,(ARD25T271J) | 270Ω,±5%,1/4W | | |
| R 24 | CF,(ARD25T221J) | 220Ω,±5%,1/4W | | |
| R 25 | CF,(ARD25T221J) | 220Ω,±5%,1/4W | | |
| R 26 | CF,(ARD25T271J) | 270Ω,±5%,1/4W | | |
| R 27 | CF,(ARD25T271J) | 270Ω,±5%,1/4W | | |
| R 28 | CF,(ARD25T391J) | 390Ω,±5%,1/4W | | |
| R 29 | CF,(ARD25T391J) | 390Ω,±5%,1/4W | | |
| R 30 | CF,(ARD25T391J) | 390Ω,±5%,1/4W | | |
| R 31 | CF,(ARD25T391J) | 390Ω,±5%,1/4W | | |
| R 32 | CF,(ARD25T681J) | 680Ω,±5%,1/4W | | |
| R 33 | CF,(ARD25T681J) | 680Ω,±5%,1/4W | | |
| R 34 | CF,(ARD25T681J) | 680Ω,±5%,1/4W | | |
| R 35 | CF,(ARD25T681J) | 680Ω,±5%,1/4W | | |
| R 36 | CF,(ARD25T151J) | 150Ω,±5%,1/4W | | |
| R 37 | CF,(ARD25T151J) | 150Ω,±5%,1/4W | | |
| R 38 | CF,(ARD25T151J) | 150Ω,±5%,1/4W | | |
| R 39 | CF,(ARD25T151J) | 150Ω,±5%,1/4W | | |
| R 40 | CF,(ARD25T151J) | 150Ω,±5%,1/4W | | |

( ): Manufacturer's part number

* : Selected at factory

C.L. OF BIPOLAR OUTPUT CIRCUIT (WITH OPTION45, 24CH)

| CKT REF | DESCRIPTION | RATING | | NOTE |
|---|---|---|---|---|
| R 41 | CF,(ARD25T151J) | 150Ω,±5%,1/4W | | |
| R 42 | CF,(ARD25T151J) | 150Ω,±5%,1/4W | | |
| R 43 | CF,(ARD25T151J) | 150Ω,±5%,1/4W | | |
| R 44 | CF,(ARD25T181J) | 180Ω,±5%,1/4W | | |
| R 45 | Var,MF,(RJ-6P 100Ω) | Max.100Ω | | |
| R 46 | CF,(ARD25T151J) | 150Ω,±5%,1/4W | | |
| R 47 | CF,(ARD25T122J) | 1.2kΩ,±5%,1/4W | | |
| R 48 | Not assigned | | | |
| R 49 | Not assigned | | | |
| R 50 | CF,(ARD25T*J) | 10Ω to 1kΩ,±5%,1/4W | | Q'ty 0 to 3,* |
| R 51 | CF,(ARD25T151J) | 150Ω,±5%,1/4W | | |
| R 52 | Var,MF,(RJ-6P 500Ω) | Max,500Ω | | |
| R 53 | CF,(ARD25T331J) | 330Ω,±5%,1/4W | | |
| R 54 | CF,(ARD25T152J) | 1.5kΩ,±5%,1/4W | | |
| R 55 | Not assigned | | | |
| R 56 | Not assigned | | | |
| R 57 | CF,(ARD25T*J) | 10Ω to 1kΩ,±5%,1/4W | | Q'ty 0 to 3,* |
| R 58 | CF,(ARD25T181J) | 180Ω,±5%,1/4W | | |
| R 59 | Var,MF,(RJ-6P 100Ω) | Max.100Ω | | |
| R 60 | CF,(ARD25T151J) | 150Ω,±5%,1/4W | | |
| R 61 | CF,(ARD25T122J) | 1.2kΩ,±5%,1/4W | | |
| R 62 | Not assigned | | | |
| R 63 | Not assigned | | | |
| R 64 | CF,(ARD25T*J) | 10Ω to 1kΩ,±5%,1/4W | | Q'ty 0 to 3,* |
| R 65 | CF,(ARD25T151J) | 150Ω,±5%,1/4W | | |
| R 66 | Var,MF,(RJ-6P 500Ω) | Max.500Ω | | |
| R 67 | CF,(ARD25T331J) | 330Ω,±5%,1/4W | | |
| R 68 | CF,(ARD25T152J) | 1.5kΩ,±5%,1/4W | | |
| R 69 | Not assigned | | | |
| R 70 | Not assigned | | | |
| R 71 | CF,(ARD25T*J) | 10Ω to 1kΩ,±5%,1/4W | | Q'ty 0 to 3,* |
| R 72 | Not assigned | | | |
| R 73 | CF,(ARD25T221J) | 220Ω,±5%,1/4W | | |
| R 74 | CF,(RN14K2E2260D) | 226Ω,±5%,1/4W | | |
| R 75 | CF,(RN14K2E2260D) | 226Ω,±0.5%,1/4W | | |
| R 76 | MF,(RN14K2E56R2D) | 56.2Ω,±0.5%,1/4W | | |
| R 77 | CF,(ARD25T221J) | 220Ω,±5%,1/4W | | |
| R 78 | MF,(RN14K2E2260D) | 226Ω,±0.5%,1/4W | | |
| R 79 | MF,(RN14K2E2260D) | 226Ω,±0.5%,1/4W | | |
| R 80 | MF,(RN14K2E56R2D) | 56.2Ω,±0.5%,1/4W | | |

( ): Manufacturer's part number

* : Selected at factory

| CKT REF | DESCRIPTION | RATING | | NOTE |
|---|---|---|---|---|
| R 81 | CF,(ARD25T222J) | 2.2kΩ,±5%,1/4W | | |
| R 82 | CF,(RD1/4PX0.87ΩJ) | 0.87Ω,±5%,1/4W | | |
| R 83 | CF,(RD1/4PX0.87ΩJ) | 0.87Ω,±5%,1/4W | | |
| R 84 | Not assigned | | | |
| R 85 | Not assigned | | | |
| R 86 | CF,(ARD25T680J) | 68Ω,±5%,1/4W | | |
| R 87 | CF,(ARD25T222J) | 2.2kΩ,±5%,1/4W | | |
| R 88 | CF,(ARD25T100J) | 10Ω,±5%,1/4W | | |
| R 89 | CF,(ARD25T220J) | 22Ω,±5%,1/4W | | |
| R 90 | CF,(ARD25T105J) | 1MΩ,±5%,1/4W | | |
| R 91 | CF,(ARD25T332J) | 3.3kΩ,±5%,1/4W | | |
| R 92 | Var,MF,(RJ-6P 1kΩ) | Max.1kΩ | | |
| R 93 | CF,(ARD25T821J) | 820Ω,±5%,1/4W | | |
| R 94 | CF,(ARD25T680J) | 68Ω,±5%,1/4W | | |
| R 95 | CF,(ARD25T102J) | 1kΩ,±5%,1/4W | | |
| R 96 | CF,(ARD25T100J) | 10Ω,±5%,1/4W | | |
| R 97 | CF,(ARD25T220J) | 22Ω,±5%,1/4W | | |
| R 98 | CF,(ARD25T105J) | 1MΩ,±5%,1/4W | | |
| R 99 | CF,(ARD25T332J) | 3.3kΩ,±5%,1/4W | | |
| R100 | Var,MF,(RJ-6P 1kΩ) | Max.1kΩ | | |
| R101 | CF,(ARD25T152J) | 1.5kΩ,±5%,1/4W | | |
| R102 | CF,(ARD25T105J) | 1MΩ,±5%,1/4W | | |
| R103 | CF,(ARD25T332J) | 3.3kΩ,±5%,1/4W | | |
| R104 | CF,(ARD25T102J) | 1kΩ,±5%,1/4W | | |
| S 1 | Pushbutton,(44S67752) | | | |
| S 2 | Pushbutton,(1F2UEE) | | | |

150

( ): Manufacturer's part number

* : Selected at factory

COMPONENT LIST OF ME448B RECEIVING UNIT

| CKT REF | DESCRIPTION | RATING | NOTE |
|---|---|---|---|
| J 1 | Receptacle,(3C-R) | | |
| J 2 | Receptacle,(3C-R) | | |
| J 3 | Receptacle,(3C-R) | | |
| J 4 | Jack,(449J82011) | | |
| J 5 | Earth jack,(44B1849) | | |
| J 6 | Connector,(U-PA0522) | | |
| J 7 | Connector,(PI011-3F) | | |
| J 8 | Terminal,(349H7025C) | 10φ | with knob |
| J 9 | Terminal,(349H7025C) | 10φ | with knob |
| J 10 | Connector,(PI011-2F) | | |
| J 11 | Receptacle,(3C-R) | | |
| J 12 | Receptacle,(3C-R) | | |
| J 13 | Connector,(PI011-4F) | | |
| J 14 | Connector,(U-SA1003) | | |
| J 15 | Terminal,(34E772) | | |
| J 16 | Connector,(PI011-2F) | | |
| J 17 | Connector,(PI011-2F) | | |
| J 18 | AC Inlet,(44J69939) | | with fuse |
| Q 1 | IC,(MC7912CK) | | |
| R 1 | CF,(ARD25T750J) | 75Ω,±5%,1/4W | |
| S 1 | Pushbutton, (NE-15J(2)-2U) | | |
| T 1 | Power trans,(44TG67702) | | |

( ): Manufacturer's part number

* : Selected at factory

| CKT REF | DESCRIPTION | RATING | NOTE |
|---|---|---|---|
| Z 1 | 442U67736P.C.Board UNipolar input CIRCUIT(ECL) | STANDARD | 44W69557 |
| | 442U67738P.C.Board UNIPOLAR INPUT CIRCUIT(0/+2 or +3V) | OPTION31 | 44W69575 * 1 |
| | 442U67740P.C.Board UNIPOLAR INPUT CIRCUIT(0/+3V) | OPTION32 | 44W69577 |
| Z 2 | 442U67734P.C.Board BIPOLAR INPUT CIRCUIT | OPTION22 | 44W69826 Q'ty 0 or 1,*2) |
| Z 3 | 442U67742P.C.Board CODE SELECTION CIRCUIT(24CH) | STANDARD | 44W69820 *3) |
| | 442U67742P.C.Board CODE SELECTION CIRCUIT(24CH) | OPTION40 | 44W69822 |
| Z 4 | 432U25519P.C.Board ERROR DETECTING CIRCUIT(24CH) | STANDARD | 44W69824 *3) |
| | 432U25519P.C.Board ERROR DETECTING CIRCUIT(24CH) | Option40 | 44W69825 |
| Z 5 | 442U67744P.C.Board CLOCK REGENERATION CIRCUIT(24CH) | for F1 | 44W69828 Q'ty 0 to 3,*4) |
| | 442U67744P.C.Board CLOCK REGENERATION CIRCUIT(24CH) | for F3 | 44W69829 Q'ty 0 to 3,*4) |
| | 442U67744P.C.Board CLOCK REGENERATION CIRCUIT(24CH) | for F1 or F3 | 44W69830 Q'ty 0 to 3,*4) |
| | 442U67744P.C.Board CLOCK REGENERATION CIRCUIT(24CH) | for F1 or F2 or F3 | 44W70817 Q'ty 0 to 3,*4) |
| Z 6 | 442U67746P.C.Board CLOCK REGENERATING CIRCUIT(24CH) | for F4 | 44W69831 Q'ty 0 or 1,*4) |
| Z 7 | 442U67750P.C.Board MOTHER BOARD CIRCUIT | | 44W69565 |
| Z 8 | 442U8910P.C.Board COUNTING CIRCUIT | STANDARD | 44W69567 *5) |
| | 442U8910P.C.Board COUNTING CIRCUIT | OPTION44 | |
| Z 9 | 442U67748P.C.Board DISPLAY CIRCUIT | STANDARD | 44W69568 *5) |
| | 442U67748P.C.Board DISPLAY CIRCUIT | OPTION44 | |
| Z 10 | Noise filter, (ZMB2203-13) | | |

( ): Manufacturer's part number

* : Selected at factory

COMPONENT LIST OF ME448B RECEIVING UNIT

| CKT REF | DESCRIPTION | RATING | NOTE |
|---|---|---|---|
| * 1) | Only one of three P.C. Board is mounted. | | |
| * 2) | Mounted only when option 22 was specified. | | |
| * 3) | Only one of binary error measurement (standard) binary error and code error (option 40) is mounted. | | |
| * 4) | Z5 is mounted only when F1 or F3 was, otherwise F1 and F3, or F1 and F2 and F3 WERE SPECIFIED. Z6 is mounted only when F4 was specified. | | |
| * 5) | Only one of GP without IB (standard) and GP with IB (option 44) is mounted. | | |

( ): Manufacturer's part number

* : Selected at factory

| CKT REF | DESCRIPTION | RATING | | NOTE |
|---|---|---|---|---|
| C 1 | Cer,(CK924F1H104Z) | 0.1μF,+80/-20%,50V | | |
| C 2 | Cer,(CK924F1H104Z) | 0.1μF,+80/-20%,50V | | |
| C 3 | Cer,(CK924F1H104Z) | 0.1μF,+80/-20%,50V | | |
| J 1 | Connector,(U-PA1019) | | | |
| J 2 | Connector,(PI011-2M) | | | |
| J 3 | Connector,(PI011-2M) | | | |
| Q 1 | IC,(HD10116) | | | |
| Q 2 | IC,(HD10125) | | | |
| R 1 | MF,(RN14K2E1000D) | 100Ω,±0.5%,1/4W | | |
| R 2 | MF,(RN14K2E3160D) | 316Ω,±0.5%,1/4W | | |
| R 3 | MF,(RN14K2E1000D) | 100Ω,±0.5%,1/4W | | |
| R 4 | MF,(RN14K2E3160D) | 316Ω,±0.5%,1/4W | | |
| R 5 | MF,(RN14K2E3160D) | 316Ω,±0.5%,1/4W | | |
| R 6 | MF,(RN14K2E1071D) | 1.07kΩ,±0.5%,1/4W | | |
| R 7 | CF,(ARD25T511J) | 510Ω,±5%,1/4W | | |
| R 8 | CF,(ARD25T511J) | 510Ω,±5%,1/4W | | |

( ): Manufacturer's part number

*: Selected at factory

C.L.OF CODE SELECTION CIRCUIT (24CH)

| CKT REF | DESCRIPTION | RATING | | NOTE |
|---|---|---|---|---|
| C 1 | Cer,(RPE111104Z50V) | 0.1μF,+80/-20%,50V | | |
| J 1 | Connector,(U-PA1019) | | | |
| S 1 | Pushbutton,(2F102UGr) | | | |
| S 2 | Not assigned | | | |
| S 3 | Pushbutton,(44S68606) | | | |

( ): Manufacturer's part number

* : Selected at factory

| CKT REF | DESCRIPTION | RATING | | NOTE |
|---|---|---|---|---|
| C 1 | Cer,(RPE111F104Z50V) | 0.1μF,+80/-20%,50V | | |
| J 1 | Connector,(U-PA1019) | | | |
| S 1 | Pushbutton,(2F102UGr) | | | |
| S 2 | Pushbutton,(1F2UEE) | | | |
| S 3 | Pushbutton,(44S67698) | | | |

( ): Manufacturer's part number

* : Selected at factory

C.L.OF ERROR DETECTING CIRCUIT (24CH)

| CKT REF | DESCRIPTION | RATING | | NOTE |
|---|---|---|---|---|
| C 1 | Cer,(CK924F1H104Z) | 0.1μF,+80/-20%,50V | | |
| C 2 | Cer,(CK924F1H104Z) | 0.1μF,+80/-20%,50V | | |
| C 3 | Cer,(CK924F1H104Z) | 0.1μF,+80/-20%,50V | | |
| C 4 | Cer,(CK924F1H104Z) | 0.1μF,+80/-20%,50V | | |
| C 5 | Cer,(CK924F1H104Z) | 0.1μF,+80/-20%,50V | | |
| C 6 | Not assigned | | | |
| C 7 | Not assigned | | | |
| C 8 | Not assigned | | | |
| C 9 | Not assigned | | | |
| C 10 | Cer,(CK924F1H104Z) | 0.1μF,+80/-20%,50V | | |
| C 11 | Cer,(CK924F1H104Z) | 0.1μF,+80/-20%,50V | | |
| C 12 | Cer,(CK924F1H104Z) | 0.1μF,+80/-20%,50V | | |
| C 13 | Elect,(CE04C1C330) | 33μF,+100/-10%,16V | | |
| C 14 | Not assigned | | | |
| C 15 | Cer,(CC924CH1H680J) | 68pF,±5%,50V | | |
| C 16 | Cer,(CC924CH1H680J) | 62pF,±5%,50V | | |
| C 17 | Elect,(CE04C1C330) | 33μF,+100/-10%,16V | | |
| C 18 | Elect,(CE04C1C330) | 33μF,+100/-10%,16V | | |
| C 19 | Plast,(ECQ-M1H 222KZ) | 0.0022μF,±10%,50V | | |
| C 20 | Plast,(ECQ-M1H 222KZ) | 0.0022μF,±10%,50V | | |
| C 21 to C 30 | Cer,(CK924F1H104Z) | 0.1μF,+80/-20%,50V | | |
| C 31 | Not assigned | | | |
| C 32 | Not assigned | | | |
| C 33 | Not assigned | | | |
| C 34 | Not assigned | | | |
| C 35 | Elect,(CE04C1C330) | 33μF,+100/-10%,16V | | |
| C 36 | Elect,(CE04C1C330) | 33μF,+100/-10%,16V | | |
| C 37 to C 63 | Cer,(CK924F1H104Z) | 0.1μF,+80/-20%,50V | | |
| J 1 | Connector,(U-SA1001) | | | |
| J 2 | Connector,(U-SA1001) | | | |
| J 3 | Connector,(U-SA1001) | | | |
| J 4 | Connector,(U-SB2201) | | | |
| J 5 | Connector,(U-SB2201) | | | |
| J 6 | Connector,(PI011-04M) | | | |
| K 1 | Rlay,(MT03A) | | | |

( ): Manufacturer's part number

* : Selected at factory

| CKT REF | DESCRIPTION | RATING | | NOTE |
|---|---|---|---|---|
| Q 1 | Tr,Si,NPN,(2SC1907) | | | |
| Q 2 | Tr,Si,NPN,(2SC2498) | | | |
| Q 3 | Not assigned | | | |
| Q 4 | Not assigned | | | |
| Q 5 | Not assigned | | | |
| Q 6 | Not assigned | | | |
| Q 7 | Not assigned | | | |
| Q 8 | Not assigned | | | |
| Q 9 | Tr,Si,NPN,(2SC1907) | | | |
| Q 10 | Tr,Si,NPN,(2SC2498) | | | |
| Q 11 | Tr,Si,NPN,(2SC2498) | | | |
| Q 12 | Tr,Si,NPN,(2SC2498) | | | |
| Q 13 | Tr,Si,NPN,(2SC2498) | | | |
| Q 14 | Tr,Si,NPN,(2SC1907) | | | |
| Q 15 | Tr,Si,NPN,(2SC1907) | | | |
| Q 16 | Di,Si,(1S953) | | | |
| Q 17 | Di,Si,(1S953) | | | |
| Q 18 | Di,Si,(1S953) | | | |
| Q 19 | Di,Si,(1S953) | | | |
| Q 20 | Not assigned | | | |
| Q 21 | Di,Si,(1S953) | | | |
| Q 22 | Not assigned | | | |
| Q 23 | Di,Si,(1S953) | | | |
| Q 24 | Tr,Si,NPN,(2SC1907) | | | |
| Q 25 | Di,Si,(1S953) | | | |
| Q 26 | Tr,Si,NPN,(2SC1907) | | | |
| Q 27 | IC,(74S20) | | | |
| Q 28 | IC,(74LS293) | | | |
| Q 29 | IC,(74LS293) | | | |
| Q 30 | IC,(74LS76A) | | | |
| Q 31 | IC,(74LS191) | | | |
| Q 32 | IC,(74LS04) | | | |
| Q 33 | IC,(74LS74A) | | | |
| Q 34 | IC,(74LS00) | | | |
| Q 35 | IC,(74S02) | | | |
| Q 36 | IC,(74LS293) | | | |
| Q 37 | IC,(74S74) | | | |
| Q 38 | IC,(74LS175) | | | |
| Q 39 | IC,(74LD157) | | | |
| Q 40 | IC,(74S86) | | | |
| Q 41 | IC,(74LS164) | | | |
| Q 42 | IC,(74LS164) | | | |
| Q 43 | IC,(74LS293) | | | |
| Q 44 | IC,(74S00) | | | |
| Q 45 | IC,(74S151) | | | |

154

( ): Manufacturer's part number

* : Selected at factory

| CKT REF | DESCRIPTION | RATING | | NOTE |
|---|---|---|---|---|
| Q 46 | IC,(74LS04) | | | |
| Q 47 | IC,(74S86) | | | |
| Q 48 | IC,(74S86) | | | |
| Q 49 | IC,(74LS290) | | | |
| Q 50 | IC,(74S04) | | | |
| Q 51 | IC,(74S86) | | | |
| Q 53 | IC,(74LS175) | | | |
| Q 54 | IC,(74S04) | | | |
| Q 55 | IC,(74LS00) | | | |
| Q 56 | IC,(74S74) | | | |
| Q 57 | IC,(74LS123) | | | |
| Q 58 | IC,(74LS175) | | | |
| Q 59 | IC,(74LS51) | | | |
| Q 60 | IC,(74121) | | | |
| Q 61 | Not assigned | | | |
| Q 62 | Not assigned | | | |
| Q 63 | IC,(74S74) | | | |
| Q 64 | IC,(74S74) | | | |
| Q 65 | IC,(74S00) | | | |
| Q 66 | IC,(74LS123) | | | |
| Q 67 | Not assigned | | | |
| Q 68 | IC,(74S74) | | | |
| Q 69 | IC,(74S74) | | | |
| Q 70 | IC,(74LS175) | | | |
| Q 71 | IC,(74S51) | | | |
| Q 72 | IC,(74S04) | | | |
| Q 73 | IC,(74S00) | | | |
| Q 74 | Not assigned | | | |
| Q 75 | IC,(74S74) | | | |
| Q 76 | IC,(74S00) | | | |
| Q 77 | IC,(74LS175) | | | |
| Q 78 | IC,(74S113) | | | |
| Q 79 | IC,(74S00) | | | |
| Q 80 | IC,(HD10125) | | | |
| Q 81 | IC,(74S11) | | | |
| Q 82 | IC,(74S74) | | | |
| Q 83 | IC,(74S64) | | | |
| Q 84 | IC,(74S00) | | | |
| Q 85 | IC,(74S74) | | | |
| Q 86 | IC,(74S74) | | | |
| Q 87 | IC,(74S00) | | | |
| Q 88 | IC,(74S00) | | | |

( ): Manufacturer's part number

* : Selected at factory

| CKT REF | DESCRIPTION | RATING | | NOTE |
|---|---|---|---|---|
| R 1 | CF,(ARD25T103J) | 10kΩ,±5%,1/4W | | |
| R 2 | CF,(ARD25T183J) | 18kΩ,±5%,1/4W | | |
| R 3 | CF,(ARD25T221J) | 220Ω,±5%,1/4W | | |
| R 4 | MF,(RN14K2H331J) | 330Ω,±5%,1/2W | | |
| R 5 | CF,(ARD25T151J) | 150Ω,±5%,1/4W | | |
| R 6 | CF,(ARD25T151J) | 150Ω,±5%,1/4W | | |
| R 7 | CF,(ARD25T682J) | 6.8kΩ,±5%,1/4W | | |
| R 8 | CF,(ARD25T123J) | 12kΩ,±5%,1/4W | | |
| R 9 | CF,(ARD25T680J) | 68Ω,±5%,1/4W | | |
| R 10 | CF,(ARD25T181J) | 180Ω,±5%,1/4W | | |
| R 11 | MF,(RN14K2H221J) | 220Ω,±5%,1/2W | | |
| R 12 to R 29 | Not assigned | | | |
| R 30 | CF,(ARD25T103J) | 10kΩ,±5%,1/4W | | |
| R 31 | CF,(ARD25T223J) | 22kΩ,±5%,1/4W | | |
| R 32 | CF,(ARD25T101J) | 100Ω,±5%,1/4W | | |
| R 33 | CF,(ARD25T151J) | 150Ω,±5%,1/4W | | |
| R 34 | CF,(ARD25T271J) | 270Ω,±5%,1/4W | | |
| R 35 | CF,(ARD25T151J) | 150Ω,±5%,1/4W | | |
| R 36 | CF,(ARD25T151J) | 150Ω,±5%,1/4W | | |
| R 37 | MF,(RN14K2H471J) | 470Ω,±5%,1/2W | | |
| R 38 | CF,(ARD25T750J) | 75Ω,±5%,1/4W | | |
| R 39 | CF,(ARD25T472J) | 4.7kΩ,±5%,1/4W | | |
| R 40 | CF,(ARD25T333J) | 33kΩ,±5%,1/4W | | |
| R 41 | CF,(ARD25T102J) | 1kΩ,±5%,1/4W | | |
| R 42 | Var,MF,(RJ-6P 500Ω) | Max.500Ω | | |
| R 43 | CF,(ARD25T332J) | 3.3kΩ,±5%,1/4W | | |
| R 44 | CF,(ARD25T102J) | 1kΩ,±5%,1/4W | | |
| R 45 | CF,(ARD25T222J) | 2.2kΩ,±5%,1/4W | | |
| R 46 | CF,(ARD25T151J) | 150Ω,±5%,1/4W | | |
| R 47 | CF,(ARD25T151J) | 150Ω,±5%,1/4W | | |
| R 48 | MF,(RN14K2H331J) | 330Ω,±5%,1/2W | | |
| R 49 | CF,(ARD25T750J) | 75Ω,±5%,1/4W | | |
| R 50 | CF,(ARD25T472J) | 4.7kΩ,±5%,1/4W | | |
| R 51 | CF,(ARD25T333J) | 33kΩ,±5%,1/4W | | |
| R 52 | CF,(ARD25T102J) | 1kΩ,±5%,1/4W | | |
| R 53 | Var,MF,(RJ-6P 500Ω) | Max.500Ω | | |
| R 54 | CF,(ARD25T222J) | 2.2kΩ,±5%,1/4W | | |
| R 55 | CF,(ARD25T102J) | 1kΩ,±5%,1/4W | | |
| R 56 | CF,(ARD25T222J) | 2.2kΩ,±5%,1/4W | | |
| R 57 | Not assigned | | | |
| R 58 | Not assigned | | | |
| R 59 | CF,(ARD25T103J) | 10kΩ,±5%,1/4W | | |
| R 60 | CF,(ARD25T103J) | 10kΩ,±5%,1/4W | | |

( ): Manufacturer's part number

* : Selected at factory

| CKT REF | DESCRIPTION | RATING | | NOTE |
|---|---|---|---|---|
| R 61 | CF,(ARD25T822J) | 8.2kΩ,±5%,1/4W | | |
| R 62 | CF,(ARD25T333J) | 33kΩ,±5%,1/4W | | |
| R 63 | CF,(ARD25T333J) | 33kΩ,±5%,1/4W | | |
| R 64 | CF,(ARD25T221J) | 220Ω,±5%,1/4W | | |
| R 65 | CF,(ARD25T221J) | 220Ω,±5%,1/4W | | |
| R 66 | CF,(ARD25T510J) | 51Ω,±5%,1/4W | | |
| R 67 | CF,(ARD25T510J) | 51Ω,±5%,1/4W | | |
| R 68 | CF,(ARD25T332J) | 3.3KΩ,±5%,1/4W | | |
| R 69 | CF,(ARD25T471J) | 470Ω,±5%,1/4W | | |
| R 70 | CF,(ARD25T511J) | 510Ω,±5%,1/4W | | |
| R 71 | CF,(ARD25T222J) | 2.2KΩ,±5%,1/4W | | |
| R 72 | CF,(ARD25T101J) | 100Ω,±5%,1/4W | | |
| R 73 | CF,(ARD25T332J) | 3.3KΩ,±5%,1/4W | | |
| R 74 | CF,(ARD25T471J) | 470Ω,±5%,1/4W | | |
| R 75 | CF,(ARD25T511J) | 510Ω,±5%,1/4W | | |
| R 76 | CF,(ARD25T222J) | 2.2KΩ,±5%,1/4W | | |
| R 77 | CF,(ARD25T101J) | 100Ω,±5%,1/4W | | |

( ): Manufacturer's part number

* : Selected at factory

| CKT REF | DESCRIPTION | RATING | | NOTE |
|---|---|---|---|---|
| C 1 to C 12 | Cer,(CK924F1H104Z) | 0.1μF,+80/-20%,50V | | |
| C 13 | Elect,(CE04C1C330) | 33μF,+100/-10%,16V | | |
| C 14 | Elect,(CE04C1C330) | 33μF,+100/-10%,16V | | |
| C 15 | Cer,(CC92CH1H680JY) | 68pF,±5%,50V | | |
| C 16 | Cer,(CC92CH1H620JY) | 62pF,±5%,50V | | |
| C 17 | Elect,(CE04C1C330) | 33μF,+100/-10%,16V | | |
| C 18 | Elect,(CE04C1C330) | 33μF,+100/-10%,16V | | |
| C 19 | Plast,(ECQ-M1H 222KZ) | 0.0022μF,±10%,50V | | |
| C 20 | Plast,(ECQ-M1H 222KZ) | 0.0022μF,±10%,50V | | |
| C 21 to C 34 | Cer,(CK924F1H104Z) | 0.1μF,+80/-20%,50V | | |
| C 35 | Elect,(CE04C1C330) | 33μF,+100-10%,16V | | |
| C 36 | Elect,(CE04C1C330) | 33μF,+100-10%,16V | | |
| C 37 to C 63 | Cer,(CK924F1H104Z) | | | |
| J 1 | Connector,(U-SA1001) | | | |
| J 2 | Connector,(U-SA1001) | | | |
| J 3 | Connector,(U-SA1001) | | | |
| J 4 | Connector,(U-SB2201) | | | |
| J 5 | Connector,(U-SB2201) | | | |
| J 6 | Connector,(PI011-04M) | | | |
| K 1 | Relay,(MT03A) | | | |
| K 2 | Relay,(NR-SD-12V) | | | |
| Q 1 | Tr,Si,NPN,(2SC1907) | | | |
| Q 2 | Tr,Si,NPN,(2SC2498) | | | |
| Q 3 | Tr,Si,NPN,(2SC1907) | | | |
| Q 4 | Tr,Si,NPN,(2SC1907) | | | |
| Q 5 | Tr,Si,NPN,(2SC2498) | | | |
| Q 6 | Tr,Si,NPN,(2SC1907) | | | |
| Q 7 | Tr,Si,NPN,(2SC2498) | | | |
| Q 8 | Tr,Si,NPN,(2SC1907) | | | |
| Q 9 | Tr,Si,NPN,(2SC1907) | | | |
| Q 10 | Tr,Si,NPN,(2SC2498) | | | |
| Q 11 | Tr,Si,NPN,(2SC2498) | | | |
| Q 12 | Tr,Si,NPN,(2SC2498) | | | |
| Q 13 | Tr,Si,NPN,(2SC2498) | | | |
| Q 14 | Tr,Si,NPN,(2SC1907) | | | |
| Q 15 | Tr,Si,NPN,(2SC1907) | | | |

( ): Manufacturer's part number

* : Selected at factory

| CKT REF | DESCRIPTION | RATING | | NOTE |
|---|---|---|---|---|
| Q 16 | Di,Si,(1S953) | | | |
| Q 17 | Di,Si,(1S953) | | | |
| Q 18 | Di,Si,(1S953) | | | |
| Q 19 | Di,Si,(1S953) | | | |
| Q 20 | Not assigned | | | |
| Q 21 | Di,Si,(1S953) | | | |
| Q 22 | Di,Si,(1S953) | | | |
| Q 23 | Di,Si,(1S953) | | | |
| Q 24 | Tr,Si,NPN,(2SC1907) | | | |
| Q 25 | Di,Si,(1S953) | | | |
| Q 26 | Tr,Si,NPN,(2SC1907) | | | |
| Q 27 | IC,(74S20) | | | |
| Q 28 | IC,(74LS293) | | | |
| Q 29 | IC,(74LS293) | | | |
| Q 30 | IC,(74LS76A) | | | |
| Q 31 | IC,(74LS191) | | | |
| Q 32 | IC,(74LS04) | | | |
| Q 33 | IC,(74LS74A) | | | |
| Q 34 | IC,(74LS00) | | | |
| Q 35 | IC,(74S02) | | | |
| Q 36 | IC,(74LS293) | | | |
| Q 37 | IC,(74S74) | | | |
| Q 38 | IC,(74LS175) | | | |
| Q 39 | IC,(74LS157) | | | |
| Q 40 | IC,(74D86) | | | |
| Q 41 | IC,(74LS164) | | | |
| Q 42 | IC,(74LS164) | | | |
| Q 43 | IC,(74LS293) | | | |
| Q 44 | IC,(74S00) | | | |
| Q 45 | IC,(74S151) | | | |
| Q 46 | IC,(74LS04) | | | |
| Q 47 | IC,(74S86) | | | |
| Q 48 | IC,(74S86) | | | |
| Q 49 | IC,(74LS290) | | | |
| Q 50 | IC,(74S04) | | | |
| Q 51 | IC,(74S04) | | | |
| Q 52 | IC,(74S86) | | | |
| Q 53 | IC,(74LS175) | | | |
| Q 54 | IC,(74S04) | | | |
| Q 55 | IC,(74LS00) | | | |
| Q 56 | IC,(74S74) | | | |
| Q 57 | IC,(74LS123) | | | |
| Q 58 | IC,(74LS175) | | | |
| Q 59 | IC,(74LS51) | | | |
| Q 60 | IC,(74121) | | | |

( ): Manufacturer's part number

* : Selected at factory 6-190

| CKT REF | DESCRIPTION | RATING | | NOTE |
|---|---|---|---|---|
| Q 61 | IC,(74S11) | | | |
| Q 62 | IC,(74S51) | | | |
| Q 63 | IC,(74S74) | | | |
| Q 64 | IC,(74S74) | | | |
| Q 65 | IC,(74S00) | | | |
| Q 66 | IC,(74LS123) | | | |
| Q 67 | IC,(74S74) | | | |
| Q 68 | IC,(74S74) | | | |
| Q 69 | IC,(74S74) | | | |
| Q 70 | IC,(74LS175) | | | |
| Q 71 | IC,(74S51) | | | |
| Q 72 | IC,(74S04) | | | |
| Q 73 | IC,(74S00) | | | |
| Q 74 | IC,(74S74) | | | |
| Q 75 | (C,(74S74) | | | |
| Q 76 | IC,(74S00) | | | |
| Q 77 | IC,(74LS175) | | | |
| Q 78 | IC,(74S113) | | | |
| Q 79 | IC,(74S00) | | | |
| Q 80 | IC,(HD10125) | | | |
| Q 81 | IC,(74S11) | | | |
| Q 82 | IC,(74S74) | | | |
| Q 83 | IC,(74S64) | | | |
| Q 84 | IC,(84S00) | | | |
| Q 85 | IC,(74S74) | | | |
| Q 86 | IC,(74S74) | | | |
| Q 87 | IC,(74S00) | | | |
| Q 88 | IC,(74S00) | | | |
| R 1 | CF,(ARD25T103J) | 10kΩ,±5%,1/4W | | |
| R 2 | CF,(ARD25T173J) | 18kΩ,±5%,1/4W | | |
| R 3 | CF,(ARD25T221J) | 220Ω,±5%,1/4W | | |
| R 4 | MF,(RN14K2H331J) | 330Ω,±5%,1/2W | | |
| R 5 | CR,(ARD25T151J) | 150Ω,±5%,1/4W | | |
| R 6 | CF,(ARD25T151J) | 150Ω,±5%,1/4W | | |
| R 7 | CF,(ARD25T682J) | 6.8kΩ,±5%,1/4W | | |
| R 8 | CF,(ARD25T123J) | 12kΩ,±5%,1/4W | | |
| R 9 | CF,(ARD25T680J) | 68Ω,±5%,1/4W | | |
| R 10 | CF,(ARD25T181J) | 180Ω,±5%,1/4W | | |
| R 11 | MF,(RN14K2H221J) | 220Ω,±5%,1/2W | | |
| R 12 | CF,(ARD25T103J) | 10KΩ,±5%,1/4W | | |
| R 13 | CF,(ARD25T183J) | 18kΩ,±5%,1/4W | | |
| R 14 | CF,(ARD25T221J) | 220Ω,±5%,1/4W | | |
| R 15 | CF,(ARD25T102J) | 1kΩ,±5%,1/4W | | |

( ): Manufacturer's part number

* : Selected at factory

| CKT REF | DESCRIPTION | RATING | | NOTE |
|---|---|---|---|---|
| R 16 | CF,(ARD25T101J) | 100Ω,±5%, 1/4W | | |
| R 17 | CF,(ARD25T560J) | 56Ω,±5%,1/4W | | |
| R 18 | CF,(ARD25T391J) | 390Ω,±5%,1/4W | | |
| R 19 | CF,(ARD25T271J) | 270Ω,±5%,1/4W | | |
| R 20 | CF,(ARD25T123J) | 12kΩ,±5%,1/4W | | |
| R 21 | CF,(ARD25T223J) | 22kΩ,±5%,1/4W | | |
| R 22 | CF,(ARD25T221J) | 220Ω,±5%,1/4W | | |
| R 23 | CF,(ARD25T471J) | 470Ω,±5%,1/4W | | |
| R 24 | CF,(ARD25T221J) | 220Ω,±5%,1/4W | | |
| R 25 | CF,(ARD25T820J) | 82Ω,±5%,1/4W | | |
| R 26 | CF,(ARD25T221J) | 220Ω,±5%,1/4W | | |
| R 27 | CF,(ARD25T221J) | 220Ω,±5%,1/4W | | |
| R 28 | CF,(ARS25T221J) | 220Ω,±5%,1/4W | | |
| R 29 | CF,(ARD25T821J) | 820Ω,±5%,1/4W | | |
| R 30 | CF,(ARD35T103J) | 10kΩ,±5%,1/4W | | |
| R 31 | CF,(ARD25T223J) | 22kΩ,±5%,1/4W | | |
| R 32 | CF,(ARD25T101J) | 100Ω,±5%,1/4W | | |
| R 33 | CF,(ARD25T151J) | 150Ω,±5%,1/4W | | |
| R 34 | CF,(ARD25T271J) | 270Ω,±5%,1/4W | | |
| R 35 | CF,(ARD25T151J) | 150Ω,±5%,1/4W | | |
| R 36 | CF,(ARD25T151J) | 150Ω,±5%,1/4W | | |
| R 37 | MF,(RN14K2H471J) | 470Ω,±5%,1/2W | | |
| R 38 | CF,(ARD25T750J) | 75Ω,±5%,1/4W | | |
| R 39 | CF,(ARD25T472J) | 4.7kΩ,±5%,1/4W | | |
| R 40 | CF,(ARD25T333J) | 33kΩ,±5%,1/4W | | |
| R 41 | CF,(ARD25T102J) | 1kΩ,±5%,1/4W | | |
| R 42 | Var,MF,(RJ-6P 500Ω) | Max.500Ω | | |
| R 43 | CF,(ARD25T332J) | 3.3kΩ,±5%,1/4W | | |
| R 44 | CF,(ARD25T102J) | 1kΩ,±5%,1/4W | | |
| R 45 | CF,(ARD25T222J) | 2.2kΩ,±5%,1/4W | | |
| R 46 | CF,(ARD25T151J) | 150Ω,±5%,1/4W | | |
| R 47 | CF,(ARD25T151J) | 150Ω,±5%,1/4W | | |
| R 48 | MF,(RN14K2H331J) | 330Ω,±5%,1/2W | | |
| R 49 | CF,(ARD25T750J) | 75Ω,±5%,1/4W | | |
| R 50 | CF,(ARD25T472J) | 4.7kΩ,±5%,1/4W | | |
| R 51 | CF,(ARD25T333J) | 33kΩ,±5%,1/4W | | |
| R 52 | CF,(ARD25T102J) | 1kΩ,±5%,1/4W | | |
| R 53 | Var,MF,(RJ-6P 500Ω) | Max.500Ω | | |
| R 54 | CF,(ARD25T222J) | 2.2kΩ,±5%,1/4W | | |
| R 55 | CF,(ARD25T102J) | 1kΩ,±5%,1/4W | | |
| R 56 | CF,(ARD25T222J) | 2.2kΩ,±5%,1/4W | | |
| R 57 | CF,(ARD25T331J) | 330Ω,±5%,1/4W | | |
| R 58 | MF,(RN141K2H391J) | 390Ω,±5%,1/2W | | |
| R 59 | CF,(ARD25T103J) | 10kΩ,±5%,1/4W | | |
| R 60 | CF,(ARD25T103J) | 10kΩ,±5%,1/4W | | |

( ): Manufacturer's part number

* : Selected at factory

| CKT REF | DESCRIPTION | RATING | | NOTE |
|---|---|---|---|---|
| R 61 | CF,(ARD25T822J) | 8.2kΩ,±5%,1/4W | | |
| R 62 | CF,(ARD25T333J) | 33kΩ,±5%,1/4W | | |
| R 63 | CF,(ARD25T333J) | 33kΩ,±5%,1/4W | | |
| R 64 | CF,(ARD25T221J) | 220Ω,±5%,1/4W | | |
| R 65 | CF,(ARD25T221J) | 220Ω,±5%,1/4W | | |
| R 66 | Not assigned | | | |
| R 67 | Not assinged | | | |
| R 68 | CF,(ARD25T332J) | 3.3kΩ,±5%,1/4W | | |
| R 69 | CF,(ARD25T471J) | 470Ω,±5%,1/4W | | |
| R 70 | CF,(ARD25T511J) | 510Ω,±5%,1/4W | | |
| R 71 | CF,(ARD25T222J) | 2.2kΩ,±5%,1/4W | | |
| R 72 | CF,(ARD25T101J) | 100Ω,±5%,1/4W | | |
| R 73 | CF,(ARD25T332J) | 3.3kΩ,±5%,1/4W | | |
| R 74 | CF,(ARD25T471J) | 470Ω,±5%,1/4W | | |
| R 75 | CF,(ARD25T511J) | 510Ω,±5%,1/4W | | |
| R 76 | CF,(ARD25T222J) | 2.2kΩ,±5%,1/4W | | |
| R 77 | CF,(ARD25T101J) | 100Ω,±5%,1/4W | | |

158

( ): Manufacturer's part number

* : Selected at factory

# C.L. OF MOTHER BOARD CIRCUIT

| CKT REF | DESCRIPTION | RATING | | NOTE |
|---|---|---|---|---|
| J 1 | Connector,(U-PB2221) | | | |
| J 2 | Connector,(U-PB2221) | | | |

( ): Manufacturer's part number

* : Selected at factory

| CKT REF | DESCRIPTION | RATING | | NOTE |
|---|---|---|---|---|
| C 1 | Elect,(CE02W1V472) | 4700μF,+100/-10%,35V | | |
| C 2 | Elect,(CE02C1V471) | 470μF,+100/-10%,35V | | |
| C 3 | Plast,(ECQ-M1H103KZ) | 0.01μF,±10%,50V | | |
| C 4 | Plast,(ECQ-M1H104KZ) | 0.1μF,±10%,50V | | |
| C 5 | Elect,(CE04C1E101) | 100μF,+100/-10%,25V | | |
| C 6 | Elect,(CE04W1E471) | 470μF,+100/-10%,25V | | |
| C 7 | Elect,(CE02W1J332) | 3300μF,+100/-10%,63V | | |
| C 8 | Elect,(CE04W1V471) | 470μF,+100/-10%,35V | | |
| C 9 | Plast,(ECQ-M1H224KZ) | 0.22μF,±10%,50V | | |
| C 10 | Elect,(CE04W1E471) | 470μF,±20%,25V | | |
| C 11 | Plast,(ECQ-M1H102KZ) | 0.001μF,±10%,50V | | |
| C 12 | Plast,(ECQ-M1H102KZ) | 0.001μF,±10%,50V | | |
| C 13 | Plast,(ECQ-M1H102KZ) | 0.001μF,±10%,50V | | |
| C 14 | Plast,(ECQ-M1H472KZ) | 0.0047μF,±10%,50V | | |
| C 15 | Plast,(ECQ-M1H222KZ) | 0.0022μF,±10%,50V | | |
| C 16 | Plast,(ECQ-M1H102KZ) | 0.001μF,±10%,50V | | |
| C 17 | Plast,(ECQ-M1H222KZ) | 0.0022μF,±10%,50V | | |
| C 18 | Plast,(ECQ-M1H102KZ) | 0.001μF,±10%,50V | | |
| C 19 | Plast,(ECQ-M1H104KZ) | 0.1μF,±10%,50V | | |
| C 20 | Plast,(ECQ-M1H222KZ) | 0.0022μF,±10%,50V | | |
| C 21 | Plast,(ECQ-M1H104KZ) | 0.1μF,±10%,50V | | |
| C 22 | Elect,(CE04C1C330) | 33μF,+100/-10%,16V | | |
| C 23 | Elect,(ECEA10V33T) | 33μF,10V | | |
| C 24 | Elect,(CE04C1C330) | 33μF,+100/-10%,16V | | |
| C 25 | Elect,(CE04C1C330) | 33μF,+100/-10%,16V | | |
| C 26 | Elect,(CE04C1C330) | 33μF,+100/-10%,16V | | |
| C 27 | Plast,(ECQ-M1H104KZ) | 0.1μF,±10%,50V | | |
| C 28 to C 44 | Cer,(CK924F1H104KZ) | 0.1μF,+80/-20%,50V | | |
| C 45 | Plast,(ECQ-M1H102KZ) | 0.001μF,±10%,50V | | |
| C 46 | Plast,(ECQ-M1H103KZ) | 0.01μF,±10%,50V | | |
| F 1 | Fuse, (MF51NN250V3.15ADC01) | 3.15A,250V | | |
| F 2 | Fuse, (MF51NN250V0.5ADC01) | 0.5A,250V | | |
| F 3 | Fuse, (MF51NN250V0.1ADC01) | 0.1A,250V | | |
| J 1 | Connector,(U-SB2201) | | | |
| J 2 | Plug,(HIF3-26P-2.54DSA) | | | |
| J 3 | Connector,(PI011-02M) | | | |
| J 4 | Receptacle, (57-40500-D39) | | | |
| J 5 | Connector,(U-PA1021) | | | |

( ): Manufacturer's part number

* : Selected at factory

# C.L. OF COUNTING CIRCUIT

| CKT REF | DESCRIPTION | RATING | | NOTE |
|---|---|---|---|---|
| K 1 | Electronic buzzer, (CMB-06) | | | |
| L 1 | Coil,(SKC-105B) | 200μH | | |
| L 2 | Coil,(449T46058D) | 100μH | | |
| M 1 | Timer,(TM-0) | | | |
| Q 1 | Rectifier stack, (RB-402-LFD) | | | |
| Q 2 | Tr,Si,PNP,(2SA708) | | | |
| Q 3 | Tr,Si,NPN,(2SC1343H) | | | |
| Q 4 | Di,Si,(S10SC4) | | | |
| Q 5 | Di,breakdown,(RD5.1EB) | 4.8 to 5.4V,400mW | | |
| Q 6 | IC,(μPC141A) | | | |
| Q 7 | Di,breakdown,(RD6.2EB) | 5.8 to 6.6V,400mW | | |
| Q 8 | Rectifier stack, (RB152LFB) | | | |
| Q 9 | Rectifier stack, (RB152LFB) | | | |
| Q 10 | Tr,Si,PNP,(2SB505) | | | |
| Q 11 | Not assigned | | | |
| Q 12 | IC,(74LS290) | | | |
| Q 13 | IC,(74LS490) | | | |
| Q 14 | IC,(74LS123) | | | |
| Q 15 | IC,(74LS123) | | | |
| Q 16 | IC,(74LS00) | | | |
| Q 17 | IC,(74LS04) | | | |
| Q 18 | IC,(74LS10) | | | |
| Q 19 | IC,(74LS04) | | | |
| Q 20 | IC,(74LS74A) | | | |
| Q 21 | IC,(74LS290) | | | |
| Q 22 | IC,(74LS490) | | | |
| Q 23 | IC,(74LS123) | | | |
| Q 24 | IC,(74LS123) | | | |
| Q 25 | IC,(74LS00) | | | |
| Q 26 | IC,(74LS10) | | | |
| Q 27 | IC,(74LS08) | | | |
| Q 28 | IC,(74LS00) | | | |
| Q 29 | IC,(74LS290) | | | |
| Q 30 | IC,(74LS490) | | | |

( ): Manufacturer's part number

* : Selected at factory

| CKT REF | DESCRIPTION | RATING | | NOTE |
|---|---|---|---|---|
| Q 31 | IC,(74LS74A) | | | |
| Q 32 | IC,(74LS08) | | | |
| Q 33 | IC,(74LS153) | | | |
| Q 34 | IC,(74LS153) | | | |
| Q 35 | IC,(74LS490) | | | |
| Q 36 | IC,(74LS490) | | | |
| Q 37 | IC,(74LS74A) | | | |
| Q 38 | IC,(74LS10) | | | |
| Q 39 | IC,(74LS11) | | | |
| Q 40 | IC,(74LS54) | | | |
| Q 41 | IC,(74LS153) | | | |
| Q 42 | IC,(74LS153) | | | |
| Q 43 | IC,(74LS157) | | | |
| Q 44 | IC,(74LS75) | | | |
| Q 45 | IC,(74LS279) | | | |
| Q 46 | IC,(74LS04) | | | |
| Q 47 | IC,(74LS00) | | | |
| Q 48 | IC,(74LS00) | | | |
| Q 49 | IC,(7407) | | | |
| Q 50 | IC,(74LS174) | | | |
| Q 51 | IC,(74LS75) | | | |
| Q 52 | IC,(74LS283) | | | |
| Q 53 | IC,(74LS147) | | | |
| Q 54 | IC,(74LS00) | | | |
| Q 55 | IC,(TC4001BP) | | | |
| Q 56 | IC,(7407) | | | |
| Q 57 | IC,(74LSL74) | | | |
| Q 58 | IC,(74LS75) | | | |
| Q 59 | IC,(74LS86) | | | |
| Q 60 | IC,(74LS)8) | | | |
| Q 61 | IC,(74S00) | | | |
| Q 62 | IC,(74LS123) | | | |
| Q 63 | IC,(74LS74A) | | | |
| Q 64 | IC,(74S112) | | | |
| Q 65 | IC,(74S112) | | | |
| Q 66 | IC,(74S74) | | | |
| Q 67 | IC,(74LS08) | | | |
| Q 68 | IC,(74LS00) | | | |
| Q 69 | IC,(74LS00) | | | |
| Q 70 | IC,(74LS00) | | | |
| Q 71 | IC,(74LS04) | | | |
| Q 72 | IC,(7438) | | | |
| Q 73 | IC,(μPC251C) | | | |
| Q 74 | IC,(74LS125) | | | |
| Q 75 | IC,(74LS00) | | | |

160

( ): Manufacturer's part number

* : Selected at factory

| CKT REF | DESCRIPTION | RATING | | NOTE |
|---|---|---|---|---|
| R 1 | CF,(ARD25T680J) | 68Ω,±5%,1/4W | | |
| R 2 | CF,(ARD25T100J) | 10Ω,±5%,1/4W | | |
| R 3 | CF,(ARD25T102J) | 1kΩ,±5%,1/4W | | |
| R 4 | CF,(ARD25T220J) | 22Ω,±5%,1/4W | | |
| R 5 | CF,(ARD-5T105J) | 1MΩ,±5%,1/4W | | |
| R 6 | CF,(ARD25T332J) | 3.3kΩ,±5%,1/4W | | |
| R 7 | CF,(ARD25T182J) | 1.8kΩ,±5%,1/4W | | |
| R 8 | Var,MF,(RJ-6P 1kΩ) | Max. 1kΩ,±1/2W | | |
| R 9 | MF,(RN14K2E1001D) | 1kΩ,±0.5%,1/4W | | |
| R 10 | MF,(RN14K2E1001D) | 1kΩ,±0.5%,1/4W | | |
| R 11 | MF,(RN14K2E9091D) | 9.09kΩ,±0.5%,1/4W | | |
| R 12 | CF,(ARD25T105J) | 1MΩ,±5%,1/4W | | |
| R 13 | CF,(ARD25T102J) | 1kΩ,±5%,1/4W | | |
| R 14 | CF,(ARD25T221J) | 220Ω,±5%,1/4W | | |
| R 15 | CF,(ARD25T682J) | 6.8kΩ,±5%,1/4W | | |
| R 16 | CF,(ARD25T471J) | 470Ω,±5%,1/4W | | |
| R 17 | CF,(ARD25T221J) | 220Ω,±5%,1/4W | | |
| R 18 | CF,(ARD25T102J) | 1kΩ,±5%,1/4W | | |
| R 19 | CF,(ARD25T223J) | 22kΩ,±5%,1/4W | | |
| R 20 | CF,(ARD25T683J) | 68kΩ,±5%,1/4W | | |
| R 21 | CF,(ARD25T682J) | 6.8kΩ,±5%,1/4W | | |
| R 22 | CF,(ARD25T682J) | 6.8kΩ,±5%,1/4W | | |
| R 23 | CF,(ARD25T683J) | 68kΩ,±5%,1/4W | | |
| R 24 | CF,(ARD25T221J) | 220Ω,±5%,1/4W | | |
| R 25 | CF,(ARD25T221J) | 220Ω,±5%,1/4W | | |
| R 26 | CF,(ARD25T682J) | 6,8kΩ,±5%,1/4W | | |
| R 27 | CF,(ARD25T221J) | 220Ω,±5%,1/4W | | |
| R 28 | CF,(ARD25T473J) | 47kΩ,±5%,1/4W | | |
| R 29 | CF,(ARD25T154J) | 150kΩ,±5%,1/4W | | |
| R 30 | CF,(ARD25T221J) | 220Ω,±5%,1/4W | | |
| R 31 | CF,(ARD25T223J) | 22kΩ,±5%,1/4W | | |
| R 32 | CF,(ARD25T224J) | 220kΩ,±5%,1/4W | | |
| R 33 | MF,(RN14K2E1503D) | 150kΩ,±0.5%,1/4W | | |
| R 34 | MF,(RN14K2E7502D) | 75kΩ,±0.5%,1/4W | | |
| R 35 | MF,(RN14K2E3742D) | 37.4kΩ,±0.5%,1/4W | | |
| R 36 | MF,(RN14K2E3742D) | 37.4kΩ,±0.5%,1/4W | | |
| R 37 | MF,(RN14K2E1542D) | 15.4kΩ,±0.5%,1/4W | | |
| R 38 | MF,(RN14K2E1542D) | 15.4kΩ,±0.5%,1/4W | | |
| R 39 | MF,(RN14K2E1542D) | 15.4kΩ,±0.5%,1/4W | | |
| R 40 | Single-in,line type, array,(IHR-8-332JA) | 3.3kΩ×8,±5%,1/8W | | |
| R 41 | Single-in,line type, array,(IHR-10-332JA) | 3.3kΩ×10,±5%,1/8W | | |
| R 42 | Single-in,line type, array,(IHR-8-332JA) | 3.3kΩ×8,±5%,1/8W | | |
| R 43 | CF,(ARD25T102J) | 1kΩ,±5%,1/4W | | |
| R 44 | CF,(ARD25T470J) | 47Ω,±5%,1/4W | | |
| R 45 | CF,(ARD25T470J) | 47Ω,±5%,1/4W | | |

( ): Manufacturer's part number

* : Selected at factory

| CKT REF | DESCRIPTION | RATING | | NOTE |
|---|---|---|---|---|
| R 46 | CF,(ARD25T470J) | 47Ω,±5%,1/4W | | |
| R 47 | Single-in, line type, array,(IHR-6-103JA) | 10kΩ×6,±5%,1/8W | | |
| R 48 | CF,(ARD25T470J) | 47Ω,±5%,1/4W | | |
| R 49 | CF,(ARD25T221J) | 220Ω,±5%,1/4W | | |
| R 50 | CF,(RD1/4PX0.87ΩJ) | 0.87Ω,±5%,1/4W | | |
| R 51 | MF,(RS1FB33ΩJ) | 33Ω,±5%,1W | | |
| R 52 | CF,(ARD25T683J) | 68kΩ,±5%,1/4W | | |
| S 1 | Pushbutton,(5F102UGr) | | | |
| S 2 | Pushbutton,(1F2U0A) | | | |
| S 3 | Pushbutton,(1F2UEE) | | | |
| S 4 | Pushbutton,(4F102UGr) | | | |
| S 5 | Pushbutton,(1F2U0A) | | | |
| S 6 | Pushbutton,(1F2UEE) | | | |



( ): Manufacturer's part number

* : Selected at factory

# C.L. OF DISPLAY CIRCUIT

| CKT REF | DESCRIPTION | RATING | | NOTE |
|---|---|---|---|---|
| J 1 | Connector, (HIF23A-26D-AA40S) | | | |
| Q 1 | IC,(TC5002BP) | | | |
| Q 2 | IC,(TC5002BP) | | | |
| Q 3 | IC,(TC5002BP) | | | |
| Q 4 | Digit display,(LN514RK) | | | |
| Q 5 | Digit display,(LN514RK) | | | |
| Q 6 | Digit display,(LN514RK) | | | |
| Q 7 | Digit display,(LN514RK) | | | |
| Q 8 | LED,(SEL105R) | | | |
| Q 9 | LED,(SEL105R) | | | |
| Q 10 | LED,(SEL105R) | | | |
| Q 11 | LED,(SEL105R) | | | |
| Q 12 | Not assigned | | | |
| Q 13 | LED,(TLG124A) | | | |
| Q 14 | LED,(TLG124A) | | | |
| R 1 | Single-in,line type, array,(IHR-7-152JB) | 1.5kΩ×7,±5%,1/8W | | |
| R 2 | Single-in,line type, array,(IHR-7-152JB) | 1.5kΩ×7,±5%,1/8W | | |
| R 3 | Single-in,line type, array,(IHR-7-152JB) | 1.5kΩ×7,±5%,1/8W | | |
| R 4 | Single-in,line type, array,(IHR-8-102JA) | 1kΩ×8,±5%,1/8W | | |

( ): Manufacturer's part number

* : Selected at factory

| CKT REF | DESCRIPTION | RATING | | NOTE |
|---|---|---|---|---|
| C 1 | Cer,(CK924F1H104Z) | 0.1μF,+80/-20%,50V | ✓ | |
| C 2 | Cer,(CK924F1H104Z) | 0.1μF,+80/-20%,50V | | |
| J 1 | Connector,(U-SA0501) | | | |
| J 2 | Connector,(U-PA1019) | | | |
| J 3 | Connector,(PI011-03M) | | | |
| K 1 | Relay,(NP-SD-12V) | | | |
| Q 1 | Tr,Si,NPN,(2SC1907) | | | |
| Q 2 | Di,Si,(1S953) | | | |
| R 1 | CF,(ARD25T331J) | 330Ω,±5%,1/4W | | |
| R 2 | MF,(RN14K2H681J) | 680Ω,±5%,1/2W | | |
| R 3 | CF,(ARD25T680J) | 68Ω,±5%,1/4W | | |
| R 4 | CF,(ARD25T330J) | 33Ω,±5%,1/4W | | |
| R 5 | CF,(ARD25T750J) | 75Ω,±5%,1/4W | | |
| R 6 | CF,(ARD25T561J) | 560Ω,±5%,1/4W | | |
| S 1 | Pushbutton,(1F2UEE) | | | |
| T 1 | Trans,(342T67152C) | | | |

( ): Manufacturer's part number

* : Selected at factory



44W69826 | 1/1

C.L. OF CLOCK REGENERATION CIPCUIT (24CH,F1)

| CKT REF | DESCRIPTION | RATING | NOTE |
|---|---|---|---|
| C 1 | Cer,(CK924F1H104Z) | 0.1μF,+80/-20%,50V | |
| C 2 | Cer,(CK924F1H104Z) | 0.1μF,+80/-20%,50V | |
| C 3 | Cer,(CK924F1H104Z) | 0.1μF,+80/-20%,50V | |
| C 4 | Cer,(CK924F1H104Z) | 0.1μF,+80/-20%,50V | |
| C 5 | Not assigned | | |
| C 6 | Not assigned | | |
| C 7 | Cer,(CK924C1H103M) | 0.01μF,±20%,50V | |
| C 8 | Cer,(CC924CJ1H030C) | 3pF,±0.25pF,50V | |
| C 9 | Cer,(CC45RH1H201JY) | 200pF,±5%,50V | |
| C10 | Cer,(CC924CH1H*J) | 12 to 15pF,±5%,50V | Q'ty 0 or 1, * |
| C11 | Not assigned | | |
| C12 | Not assigned | | |
| C13 | Not assigned | | |
| C14 | Not assigned | | |
| C15 | Not assigned | | |
| C16 | Cer,(CK924C1H102M) | 1000pF,±20%,50V | |
| C17 | Cer,(CK924C1H103M) | 0.01μF,±20%,50V | |
| J 1 | Connector,(U-PA1019) | | |
| L 1 | Coil,(339T20147C) | 51.1μH | |
| Q 1 | IC,(74LS04) | | |
| Q 2 | IC,(74LS04) | | |
| Q 3 | IC,(74LS00) | | |
| Q 4 | Not assigned | | |
| Q 5 | Tr,Si,NPN,(2SC2498) | | |
| Q 6 | J-FET,Nch,(2SK55E) | | |
| Q 7 | Tr,Si,NPN,(2SC1907) | | |
| Q 8 | Tr,Si,NPN,(2SC2498) | | |
| Q 9 | Tr,Si,NPN,(2SC2498) | | |
| Q10 | Di,Si,(1S953) | | |
| R 1 | Not assigned | | |
| R 2 | Not assigned | | |
| R 3 | CF,(ARD25T332J) | 3.3kΩ,±5%,1/4W | |
| R 4 | CF,(ARD25T472J) | 4.7kΩ,±5%,1/4W | |
| R 5 | CF,(ARD25T682J) | 6.8kΩ,±5%,1/4W | |
| R 6 | CF,(ARD25T332J) | 3.3kΩ,±5%,1/4W | |
| R 7 | CF,(ARD25T102J) | 1kΩ,±5%,1/4W | |
| R 8 | CF,(ARD25T331J) | 330Ω,±5%,1/4W | |
| R 9 | CF,(ARD25T154J) | 150kΩ,±5%,1/4W | |
| R10 | Not assigned | | |

( ): Manufacturer's part number

* : Selected at factory

C.L. OF CLOCK REGENERATION CIPCUIT (24CH,F1)

| CKT REF | DESCRIPTION | RATING | NOTE |
|---|---|---|---|
| R11 | Not assigned | | |
| R12 | CF,(ARD25T224J) | 220kΩ,±5%,1/4W | |
| R13 | CF,(ARD25T121J) | 120Ω,±5%,1/4W | |
| R14 | CF,(ARD25T152J) | 1.5kΩ,±5%,1/4W | |
| R15 | CF,(ARD25T472J) | 4.7kΩ,±5%,1/4W | |
| R16 | CF,(ARD25T682J) | 6.8kΩ,±5%,1/4W | |
| R17 | CF,(ARD25T101J) | 100Ω,±5%,1/4W | |
| R18 | CF,(ARD25T681J) | 680Ω,±5%,1/4W | |
| R19 | CF,(ARD25T151J) | 150Ω,±5%,1/4W | |
| R20 | CF,(ARD25T151J) | 150Ω,±5%,1/4W | |
| R21 | MF,(RN14K2H391J) | 390Ω,±5%,1/2W | |
| R22 | CF,(ARD25T750J) | 75Ω,±5%,1/4W | |
| R23 | CF,(ARD25T821J) | 820Ω,±5%,1/4W | |
| R24 | CF,(ARD25T122J) | 1.2kΩ,±5%,1/4W | |
| R25 | CF,(ARD25T472J) | 4.7kΩ,±5%,1/4W | |
| R26 | CF,(ARD25T332J) | 3.3kΩ,±5%,1/4W | |
| R27 | Var,MF,(RJ-6P 500Ω) | 500Ω, 1/2W | |

Manufacturer's part number

Selected at factory 6-203

C.L. OF CLOCK REGENERATION CIRCUIT (24CH,F3)

| CKT REF | DESCRIPTION | RATING | NOTE |
|---|---|---|---|
| C 1 | Cer,(CK924F1H104Z) | 0.1μF,+80/-20%,50V | |
| C 2 | Cer,(CK924F1H104Z) | 0.1μF,+80/-20%,50V | |
| C 3 | Cer,(CK924F1H104Z) | 0.1μF,+80/-20%,50V | |
| C 4 | Cer,(CK924F1H104Z) | 0.1μF,+80/-20%,50V | |
| C 5 | Not assigned | | |
| C 6 | Not assigned | | |
| C 7 | Cer,(CK924C1H103M) | 0.01μF,±20%,50V | |
| C 8 | Cer,(CC924CJ1H030C) | 3pF,±0.25pF,50V | |
| C 9 | Not assigned | | |
| C10 | Not assigned | | |
| C11 | Not assigned | | |
| C12 | Not assigned | | |
| C13 | Cer,(CC45RH1H101JY) | 100pF,±5%,50V | |
| C14 | Cer,(CC924CH1H120J) | 12pF,±5%,50V | |
| C15 | Cer,(CC924CH1H*D) | 4 to 10pF,±0.5pF,50V | Q'ty 0 or 1, * |
| C16 | Cer,(CK924C1H102M) | 1000pF,±20%,50V | |
| C17 | Cer,(CK924C1H103M) | 0.01μF,±20%,50V | |
| J 1 | Connector,(U-PA1019) | | |
| L 1 | Not assigned | | |
| L 2 | Not assigned | | |
| L 3 | Coil,(339T20144F) | | |
| Q 1 | IC,(74LS04) | | |
| Q 2 | IC,(74LS04) | | |
| Q 3 | IC,(74LS00) | | |
| Q 4 | Not assigned | | |
| Q 5 | Tr,Si,NPN,(2SC2498) | | |
| Q 6 | J-FET,Nch,(2SK55E) | | |
| Q 7 | Tr,Si,NPN,(2SC1907) | | |
| Q 8 | Tr,Si,NPN,(2SC2498) | | |
| Q 9 | Tr,Si,NPN,(2SC2498) | | |
| Q10 | Di,Si,(1S953) | | |
| R 1 | Not assigned | | |
| R 2 | Not assigned | | |
| R 3 | CF,(ARD25T332J) | 3.3kΩ,±5%,1/4W | |
| R 4 | CF,(ARD25T472J) | 4.7kΩ,±5%,1/4W | |
| R 5 | CF,(ARD25T682J) | 6.8kΩ,±5%,1/4W | |
| R 6 | CF,(ARD25T332J) | 3.3kΩ,±5%,1/4W | |
| R 7 | CF,(ARD25T102J) | 1kΩ,±5%,1/4W | |
| R 8 | CF,(ARD25T331J) | 330Ω,±5%,1/4W | |
| R 9 | Not assigned | | |
| R10 | Not assigned | | |

( ): Manufacturer's part number

* : Selected at factory

C.L. OF CLOCK REGENERATION CIRCUIT (24CH,F3)

| CKT REF | DESCRIPTION | RATING | NOTE |
|---|---|---|---|
| R11 | CF,(ARD25T104J) | 100kΩ,±5%,1/4W | |
| R12 | CF,(ARD25T224J) | 220kΩ,±5%,1/4W | |
| R13 | CF,(ARD25T121J) | 120Ω,±5%,1/4W | |
| R14 | CF,(ARD25T152J) | 1.5kΩ,±5%,1/4W | |
| R15 | CF,(ARD25T472J) | 4.7kΩ,±5%,1/4W | |
| R16 | CF,(ARD25T682J) | 6.8kΩ,±5%,1/4W | |
| R17 | CF,(ARD25T101J) | 100Ω,±5%,1/4W | |
| R18 | CF,(ARD25T681J) | 680Ω,±5%,1/4W | |
| R19 | CF,(ARD25T151J) | 150Ω,±5%,1/4W | |
| R20 | CF,(ARD25T151J) | 150Ω,±5%,1/4W | |
| R21 | MF,(RN14K2H391J) | 390Ω,±5%,1/2W | |
| R22 | CF,(ARD25T750J) | 75Ω,±5%,1/4W | |
| R23 | CF,(ARD25T821J) | 820Ω,±5%,1/4W | |
| R24 | CF,(ARD25T122J) | 1.2kΩ,±5%,1/4W | |
| R25 | CF,(ARD25T472J) | 4.7kΩ,±5%,1/4W | |
| R26 | CF,(ARD25T332J) | 3.3kΩ,±5%,1/4W | |
| R27 | Var,MF,(RJ-6P 500Ω) | 500Ω, 1/2W | |



: Manufacturer's part number

: Selected at factory. 6-205

C.L. OF CLOCK REGENERATION CIRCUIT (24CH,F1,F3)

| CKT REF | DESCRIPTION | RATING | NOTE |
|---|---|---|---|
| C 1 | Cer,(CK924F1H104Z) | 0.1μF,+80/-20%,50V | |
| C 2 | Cer,(CK924F1H104Z) | 0.1μF,+80/-20%,50V | |
| C 3 | Cer,(CK924F1H104Z) | 0.1μF,+80/-20%,50V | |
| C 4 | Cer,(CK924F1H104Z) | 0.1μF,+80/-20%,50V | |
| C 5 | Not assigned | | |
| C 6 | Not assigned | | |
| C 7 | Cer,(CK924C1H103M) | 0.01μF,±20%,50V | |
| C 8 | Cer,(CC924CJ1H030C) | 3pF,±0.25pF,50V | |
| C 9 | Cer,(CC45RH1H201JY) | 200pF,±5%,50V | |
| C10 | Cer,(CC924CH1H*J) | 12 to 15pF,±5%,50V | Q'ty 0 or 1, * |
| C11 | Not assigned | | |
| C12 | Not assigned | | |
| C13 | Cer,(CC45RH1H101JY) | 100pF,±5%,50V | |
| C14 | Cer,(CC924CH1H120J) | 12pF,±5%,50V | |
| C15 | Cer,(CC924CH1H*D) | 4 to 10pF,±0.5pF,50V | * |
| C16 | Cer,(CK924C1H102M) | 1000pF,±20%,50V | |
| C17 | Cer,(CK924C1H103M) | 0.01μF,±20%,50V | |
| J 1 | Connector,(U-PA1019) | | |
| K 1 | Relay,(NR-SD-12V) | | |
| L 1 | Coil,(339T20147C) | 51.1μH | |
| L 2 | Not assigned | | |
| L 3 | Coil,(339T20144F) | 4.7μH | |
| Q 1 | IC,(74LS04) | | |
| Q 2 | IC,(74LS04) | | |
| Q 3 | IC,(74LS00) | | |
| Q 4 | Not assigned | | |
| Q 5 | Tr,Si,NPN,(2SC2498) | | |
| Q 6 | J-FET,Nch,(2SK55E) | | |
| Q 7 | Tr,Si,NPN,(2SC1907) | | |
| Q 8 | Tr,Si,NPN,(2SC2498) | | |
| Q 9 | Tr,Si,NPN,(2SC2498) | | |
| Q10 | Di,Si,(1S953) | | |
| Q11 | Di,Si,(1S953) | | |

( ): Manufacturer's part number

* : Selected at factory

C.L. OF CLOCK REGENERATION CIRCUIT (24CH,F1,F3)

| CKT REF | DESCRIPTION | RATING | NOTE |
|---|---|---|---|
| R 1 | Not assigned | | |
| R 2 | Not assigned | | |
| R 3 | CF,(ARD25T332J) | 3.3kΩ,±5%,1/4W | |
| R 4 | CF,(ARD25T472J) | 4.7kΩ,±5%,1/4W | |
| R 5 | CF,(ARD25T682J) | 6.8kΩ,±5%,1/4W | |
| R 6 | CF,(ARD25T332J) | 3.3kΩ,±5%,1/4W | |
| R 7 | CF,(ARD25T102J) | 1kΩ,±5%,1/4W | |
| R 8 | CF,(ARD25T331J) | 330Ω,±5%,1/4W | |
| R 9 | CF,(ARD25T154J) | 150kΩ,±5%,1/4W | |
| R10 | Not assigned | | |
| R11 | CF,(ARD25T104J) | 100kΩ,±5%,1/4W | |
| R12 | CF,(ARD25T224J) | 220kΩ,±5%,1/4W | |
| R13 | CF,(ARD25T121J) | 120Ω,±5%,1/4W | |
| R14 | CF,(ARD25T152J) | 1.5kΩ,±5%,1/4W | |
| R15 | CF,(ARD25T472J) | 4.7kΩ,±5%,1/4W | |
| R16 | CF,(ARD25T682J) | 6.8kΩ,±5%,1/4W | |
| R17 | CF,(ARD25T101J) | 100Ω,±5%,1/4W | |
| R18 | CF,(ARD25T681J) | 680Ω,±5%,1/4W | |
| R19 | CF,(ARD25T151J) | 150Ω,±5%,1/4W | |
| R20 | CF,(ARD25T151J) | 150Ω,±5%,1/4W | |
| R21 | MF,(RN14K2H391J) | 390Ω,±5%,1/2W | |
| R22 | CF,(ARD25T750J) | 75Ω,±5%,1/4W | |
| R23 | CF,(ARD25T821J) | 820Ω,±5%,1/4W | |
| R24 | CF,(ARD25T122J) | 1.2kΩ,±5%,1/4W | |
| R25 | CF,(ARD25T472J) | 4.7kΩ,±5%,1/4W | |
| R26 | CF,(ARD25T332J) | 3.3kΩ,±5%,1/4W | |
| R27 | Var,MF,(RJ-6P 500Ω) | 500Ω,±1/2W | |

C.L. OF CLOCK REGENERATION CIRCUIT (24CH,F1,F2,F3)

| CKT REF | DESCRIPTION | RATING | NOTE |
|---|---|---|---|
| C 1 | Cer,(CK924F1H104Z) | 0.1μF,+80/-20%,50V | |
| C 2 | Cer,(CK924F1H104Z) | 0.1μF,+80/-20%,50V | |
| C 3 | Cer,(CK924F1H104Z) | 0.1μF,+80/-20%,50V | |
| C 4 | Cer,(CK924F1H104Z) | 0.1μF,+80/-20%,50V | |
| C 5 | Cer,(CC924CH1H100D) | 10pF,±0.5pF,50V | |
| C 6 | Cer,(CC924CH1H120J) | 12pF,±5%,50V | |
| C 7 | Cer,(CK924C1H103M) | 0.01μF,±20%,50V | |
| C 8 | Cer,(CC924CJ1H030C) | 3pF,±0.25pF,50V | |
| C 9 | Cer,(CC45RH1H201JY) | 200pF,±5%,50V | |
| C10 | Cer,(CC924CH1H*J) | 12 to 15pF,±5%,50V | Q'ty 0 or 1, * |
| C11 | Cer,(CC45RH1H151JY) | 150pF,±5%,50V | |
| C12 | Cer,(CC924CH1H*J) | 12 to 47pF,±5%,50V | Q'ty 0 or 1, * |
| C13 | Cer,(CC45RH1H101JY) | 100pF,±5%,50V | |
| C14 | Cer,(CC924CH1H120J) | 12pF,±5%,50V | |
| C15 | Cer,(CC924CH1H*D) | 4 to 10pF,±0.5pF,50V | Q'ty 0 or 1, * |
| C16 | Cer,(CK924C1H102M) | 1000pF,±20%,50V | |
| C17 | Cer,(CK924C1H103M) | 0.01μF,±20%,50V | |
| J 1 | Connector,(U-PA1019) | | |
| K 1 | Relay,(NR-SD-12V) | | |
| K 2 | Relay,(NR-SD-12V) | | |
| L 1 | Coil,(339T20147C) | 51.1μH | |
| L 2 | Coil,(339T20145J) | 15μH | |
| L 3 | Coil,(339T20144F) | 4.7μH | |
| Q 1 | IC,(74LS04) | | |
| Q 2 | IC,(74LS04) | | |
| Q 3 | IC,(74LS00) | | |
| Q 4 | IC,(74LS123) | | |
| Q 5 | Tr,Si,NPN,(2SC2498) | | |
| Q 6 | J-FET,Nch,(2SK55E) | | |
| Q 7 | Tr,Si,NPN,(2SC1907) | | |
| Q 8 | Tr,Si,NPN,(2SC2498) | | |
| Q 9 | Tr,Si,NPN,(2SC2498) | | |
| Q10 | Di,Si,(1S953) | | |
| Q11 | Di,Si,(1S953) | | |
| Q12 | Di,Si,(1S953) | | |

( ): Manufacturer's part number

* : Selected at factory

C.L. OF CLOCK REGENERATION CIRCUIT (24CH,F1,F2,F3)

| CKT REF | DESCRIPTION | RATING | NOTE |
|---|---|---|---|
| R 1 | CF,(ARD25T562J) | 5.6kΩ,±5%,1/4W | |
| R 2 | CF,(ARD25T822J) | 8.2kΩ,±5%,1/4W | |
| R 3 | CF,(ARD25T332J) | 3.3kΩ,±5%,1/4W | |
| R 4 | CF,(ARD25T472J) | 4.7kΩ,±5%,1/4W | |
| R 5 | CF,(ARD25T682J) | 6.8kΩ,±5%,1/4W | |
| R 6 | CF,(ARD25T332J) | 3.3kΩ,±5%,1/4W | |
| R 7 | CF,(ARD25T102J) | 1kΩ,±5%,1/4W | |
| R 8 | CF,(ARD25T331J) | 330Ω,±5%,1/4W | |
| R 9 | CF,(ARD25T154J) | 150kΩ,±5%,1/4W | |
| R10 | CF,(ARD25T154J) | 150kΩ,±5%,1/4W | |
| R11 | CF,(ARD25T104J) | 100kΩ,±5%,1/4W | |
| R12 | CF,(ARD25T224J) | 220kΩ,±5%,1/4W | |
| R13 | CF,(ARD25T121J) | 120Ω,±5%,1/4W | |
| R14 | CF,(ARD25T152J) | 1.5kΩ,±5%,1/4W | |
| R15 | CF,(ARD25T472J) | 4.7kΩ,±5%,1/4W | |
| R16 | CF,(ARD25T682J) | 6.8kΩ,±5%,1/4W | |
| R17 | CF,(ARD25T101J) | 100Ω,±5%,1/4W | |
| R18 | CF,(ARD25T681J) | 680Ω,±5%,1/4W | |
| R19 | CF,(ARD25T151J) | 150Ω,±5%,1/4W | |
| R20 | CF,(ARD25T151J) | 150Ω,±5%,1/4W | |
| R21 | MF,(RN14K2H391J) | 390Ω,±5%,1/2W | |
| R22 | CF,(ARD25T750J) | 75Ω,±5%,1/4W | |
| R23 | CF,(ARD25T821J) | 820Ω,±5%,1/4W | |
| R24 | CF,(ARD25T122J) | 1.2kΩ,±5%,1/4W | |
| R25 | CF,(ARD25T472J) | 4.7kΩ,±5%,1/4W | |
| R26 | CF,(ARD25T332J) | 3.3kΩ,±5%,1/4W | |
| R27 | Var,MF,(RJ-6P 500Ω) | 500Ω,1/2W | |
| R28 | Var,MF,(RJ-6P 20kΩ) | 20kΩ,1/2W | |



: Manufacturer's part number

: Selected at factory

C.L.OF CLOCK REGENERATION CIRCUIT (24CH,F4)

| CKT REF | DESCRIPTION | RATING | | NOTE |
|---|---|---|---|---|
| C 1 | Cer,(CK924F1H104Z) | 0.1μF,+80/-20%,50V | | |
| C 2 | Cer,(CK924F1H104Z) | 0.1μF,+80/-20%,50V | | |
| C 3 | Cer,(CK924F1H104Z) | 0.1μF,+80/-20%,50V | | |
| C 4 | Cer,(CK924F1H104Z) | 0.1μF,+80/-20%,50V | | |
| C 5 | Cer,(CK924C1H102M) | 1000ρF,±20%,50V | | |
| C 6 | Cer,(CC924CH1H200J) | 20ρF,±5%,50V | | |
| C 7 | Cer,(CC924CH1H040D) | 4ρF,±0.5ρF 50V | | |
| C 8 | Var,cer,(CV03A2F080YI) | Max.8ρF | | |
| C 9 | Cer,(RD340CK0R5CY50) | 0.5ρF,±0.25ρF,50V | | |
| J 1 | Connector,(U-PA1019) | | | |
| L 1 | Coil,(442T46061B) | | | |
| Q 1 | IC,(74S04) | | | |
| Q 2 | Tr,Si,NPN,(2SC2498) | | | |
| Q 3 | Tr,Si,NPN,(2SC1907) | | | |
| Q 4 | Tr,Si,NPN,(2SC2498) | | | |
| Q 5 | Tr,Si,NPN,(2SC2498) | | | |
| Q 6 | Di,Si,(1S953) | | | |
| R 1 | CF,(ARD25T682J) | 6.8kΩ,±5%,1/4W | | |
| R 2 | CF,(ARD25T332J) | 3.3kΩ,±5%,1/4W | | |
| R 3 | CF,(ARD25T101J) | 100Ω,±5%,1/4W | | |
| R 4 | CF,(ARD25T821J) | 820Ω,±5%,1/4W | | |
| R 5 | CF,(ARD25T682J) | 6.8kΩ,±5%,1/4W | | |
| R 6 | CF,(ARD25T103J) | 10KΩ,±5%,1/4W | | |
| R 7 | CF,(ARD25T101J) | 100Ω,±5%,1/4W | | |
| R 8 | CF,(ARD25T681J) | 680Ω,±5%,1/4W | | |
| R 9 | CF,(ARD25T151J) | 150Ω,±5%,1/4W | | |
| R 10 | CF,(ARD25T151J) | 150Ω,±5%,1/4W | | |
| R 11 | MF,(RN14K2H391J) | 390Ω,±5%,1/2W | | |
| R 12 | CF,(ARD25T750J) | 75Ω,±5%,1/4W | | |
| R 13 | CF,(ARD25T821J) | 820Ω,±5%,1/4W | | |
| R 14 | CF,(ARD25T122J) | 1.2kΩ,±5%,1/4W | | |
| R 15 | CF,(ARD25T472J) | 4.7kΩ,±5%,1/2W | | |
| R 16 | Var,MF,(RJ-6P 500Ω) | Max.500Ω | | |

( ): Manufacturer's part number

* : Selected at factory

C.L. OF UNIPOLAR INPUT CIRCUIT (0/+2.4V,OPT31)

| CKT REF | DESCRIPTION | RATING | | NOTE |
|---|---|---|---|---|
| C 1 | Cer,(CK924F1H104Z) | 0.1μF,+80/-20%,50V | | |
| J 1 | Connector,(U-PA1019) | | | |
| J 2 | Connector,(PI011-2M) | | | |
| J 3 | Connector,(PI011-2M) | | | |
| R 1 | CF,(ARD25T750J) | 75Ω,±5%,1/4W | | |
| R 2 | CF,(ARD25T332J) | 3.3kΩ,±5%,1/4W | | |
| R 3 | CF,(ARD25T750J) | 75Ω,±5%,1/4W | | |
| R 4 | CF,(ARD25T332J) | 3.3kΩ,±5%,1/4W | | |
| S 1 | Slide,(SLBP222C) | | | |

( ): Manufacturer's part number

* : Selected at factory



44W69575 | 1/1

# C.L. OF UNIPOLAR INPUT CIRCUIT (0/+3V,OPT32)

| CKT REF | DESCRIPTION | RATING | | NOTE |
|---|---|---|---|---|
| C 1 | Cer,(CK924F1H104Z) | 0.1μF,+80/-20%,50V | | |
| C 2 | Cer,(CK924F1H104Z) | 0.1μF,+80/-20%,50V | | |
| C 3 | Cer,(CK924F1H104Z) | 0.1μF,+80/-20%,50V | | |
| C 4 | Cer,(CK924F1H104Z) | 0.1μF,+80/-20%,50V | | |
| C 5 | Cer,(CK924F1H104Z) | 0.1μF,+80/-20%,50V | | |
| C 6 | Cer,(CK924F1H104Z) | 0.1μF,+80/-20%,50V | | |
| C 7 | Cer,(CK924F1H104Z) | 0.1μF,+80/-20%,50V | | |
| J 1 | Connector,(U-PA1019) | | | |
| J 2 | Connector,(PI011-2M) | | | |
| J 3 | Connector,(PI011-2M) | | | |
| Q 1 | Tr,Si,NPN,(2SC1907) | | | |
| Q 2 | Di,breakdown,(RD3.6EB) | 3.4 to 3.8V,400mW | | |
| Q 3 | Tr,Si,NPN,(2SC2498) | | | |
| Q 4 | Tr,Si,NPN,(2SC2498) | | | |
| Q 5 | Tr,Si,NPN,(2SC1907) | | | |
| Q 6 | Di,breakdown,(RD3.6EB) | 3.4 to 3.8V,400mW | | |
| Q 7 | Tr,Si,NPN,(2SC2498) | | | |
| Q 8 | Tr,Si,NPN,(2SC2498) | | | |
| Q 9 | Di,breakdown,(02BZ2.2) | | | |
| R 1 | CF,(ARD25T750J) | 75Ω,±5%,1/4W | | |
| R 2 | CF,(ARD25T101J) | 100Ω,±5%,1/4W | | |
| R 3 | CF,(ARD25T102J) | 1kΩ,±5%,1/4W | | |
| R 4 | CF,(ARD25T510J) | 51Ω,±5%,1/4W | | |
| R 5 | CF,(ARD25T510J) | 51Ω,±5%,1/4W | | |
| R 6 | MF,(RN14K2H391J) | 390Ω,±5%,1/2W | | |
| R 7 | CF,(ARD25T151J) | 150Ω,±5%,1/4W | | |
| R 8 | Var,MF,(RJ-6P 500Ω) | Max. 500Ω,1/2W | | |
| R 9 | CF,(ARD25T*J) | 560Ω to 1kΩ,±5%,1/4W | | * |
| R 10 | CF,(ARD25T332J) | 3.3kΩ,±5%,1/4W | | |
| R 11 | CF,(ARD25T750J) | 75Ω,±5%,1/4W | | |
| R 12 | CF,(ARD25T101J) | 100Ω,±5%,1/4W | | |
| R 13 | CF,(ARD25T182J) | 1.8kΩ,±5%,1/4W | | |
| R 14 | CF,(ARD25T510J) | 51Ω,±5%,1/4W | | |
| R 15 | CF,(ARD25T510J) | 51Ω,±5%,1/4W | | |
| R 16 | MF,(RN14K2H391J) | 390Ω,±5%,1/2W | | |
| R 17 | CF,(ARD25T151J) | 150Ω,±5%,1/4W | | |
| R 18 | Var,MF,(RJ-6P 500Ω) | Max. 500Ω,1/2W | | |
| R 19 | CF,(ARD25T*J) | 560Ω to 1kΩ,±5%,1/4W | | * |
| R 20 | CF,(ARD25T332J) | 3.3kΩ,±5%,1/4W | | |

( ): Manufacturer's part number

* : Selected at factory

COMPONENT LIST OF ME448B RECEIVING UNIT (WITH OPTION45)

| CKT REF | DESCRIPTION | RATING | | NOTE |
|---|---|---|---|---|
| J 1 | Receptacle, (3C-R) | | | |
| J 2 | Receptacle, (3C-R) | | | |
| J 3 | Receitacle, (3C-R) | | | |
| J 4 | Jack, (449J82011) | | | |
| J 5 | Earth jack, (44B1849) | | | |
| J 6 | Connector, (U-PA0522) | | | |
| J 7 | Connector, (PI011-3F) | | | |
| J 8 | Terminal, (349H7025C) | 10φ | | with knob |
| J 9 | Terminal, (349H7025C) | 10φ | | with knob |
| J 10 | Connector, (PI011-2F) | | | |
| J 11 | Receptacle, (3C-R) | | | |
| J 12 | Receptacle, (3C-R) | | | |
| J 13 | Connector, (PI011-4F) | | | |
| J 14 | Connector, (U-SA1003) | | | |
| J 15 | Terminal, (34E772) | | | |
| J 16 | Connector, (PI011-2F) | | | |
| J 17 | Connector, (PI011-2F) | | | |
| J 18 | Connector, (U-SA1003) | | | |
| J 19 | Connector, (CN1208DJMS) | | | |
| J 20 | AC Inlet, (44J69939) | | | with fuse |
| Q 1 | IC, (MC7912CK) | | | |
| R 1 | CF, (ARD25T750J) | 75Ω, ±5%, 1/4W | | |
| S 1 | Pushbutton, (NE-15(2)-2U) | | | |
| S 2 | Toggle, (8E2011) | | | |
| T 1 | Power trans, (44T67702) | | | |

168

( ): Manufacturer's part number

* : Selected at factory

COMPONENT LIST OF ME448B RECEIVING UNIT (WITH OPTION45)

| CKT REF | DESCRIPTION | RATING | | NOTE |
|---|---|---|---|---|
| Z 1 | 442U67736P.C.Board UNIPOLAR INPUT CIRCUIT(ECL) | STANDARD | | 44W69557 |
| | 442U67738P.C.Board UNIPOLAR INPUT CIRCUIT(0/+2 or +3V) | OPTION31 | | 44W69575 * 1 |
| | 442U67740P.C.Board UNIPOLAR INPUT CIRCUIT(0/+3V) | OPTION32 | | 44W69577 |
| Z 2 | 442U67734P.C.Board BIPOLAR INPUT CIRCUIT | OPTION22 | | 44W69569 Q'ty 0 or 1,*2) |
| Z 3 | 442U67742P.C.Board CODE SELECTION CIRCUIT(30CH) | STANDARD | | 44W69559 *3) |
| | 442U67742P.C.Board CODE SELECTION CIRCUIT(30CH) | OPTION40 | | 44W9551 |
| Z 4 | 432U25519P.C.Board ERROR DETECTING CIRCUIT(30CH) | STANDARD | | 44W69563 *3) |
| | 43225519P.C.Board ERROR DETECTING CIRCUIT(30CH) | OPTION40 | | 44W69564 |
| Z 5 | 442U67744P.C.Board CLOCK REGENERATION CIRCUIT(30CH) | for F1 | | 44W69571 Q'ty 0 or 1,*4) |
| | 442U67744P.C.Board CLOCK REGENERATION CIRCUIT(30CH) | for F3 | | 44W69572 Q'ty 0 or 1,*4) |
| | 442U67744P.C.Board CLOCK REGENERATION CIRCUIT | for F1 or F3 | | 44W69573 Q'ty 0 or 1,*4) |
| | 442U67744P.C.Board CLOCK REGENERATION CIRCUIT | for F1 or F2 or F3 | | 44W70464 Q'ty 0 or 1,*4) |
| Z 6 | 442U67746P.C.Board CLOCK REGENERATION CIRCUIT(30CH) | for F4 | | 44W69574 Q'ty 0 or 1,*4) |
| Z 7 | 442U67750P.C.Board MOTHER BOARD CIRCUIT | | | 44W69565 |
| Z 8 | 442U8910P.C.Board COUNTING CIRCUIT | STANDARD | | 44W69567 *5) |
| | 442U8910P.C.Board COUNTING CIRCUIT | OPTION44 | | |
| Z 9 | 442U67748P.C.Board DISPLAY CIRCUIT | STANDARD | | 44W69568 *5) |
| | 442U67748P.C.Board DISPLAY CIRCUIT | OPTION44 | | |
| Z 10 | Noise filter, (ZMB2203-13) | | | |

( ): Manufacturer's part number

* : Selected at factory

| CKT REF | DESCRIPTION | RATING | | NOTE |
|---|---|---|---|---|
| * 1) | Only one of three P.C. Board is mounted. | | | |
| * 2) | Mounted only when option 22 was specified. | | | |
| * 3) | Only one of binary error measurement (standard), binary error and code error (option 40) is mounted | | | |
| * 4) | Z5 is mounted only when F1 or F3 was otherwise F1 and F3, or F1, F2 and F3 specified. Z6 is mounted only when F4 was specified. | | | |
| * 5) | Only one of GP without IB (standard) and GP with IB (option 44) is mounted. | | | |

169

( ): Manufacturer's part number

* : Selected at factory

C.L. OF COUNTING CIRCUIT (WITH OPTION45)

| CKT REF | DESCRIPTION | RATING | | NOTE |
|---|---|---|---|---|
| C 1 | Elect,(CE02W1V472) | 4700μF,+100/-10%,35V | | |
| C 2 | Elect,(CE02CV471) | 470μF,+100/-10%,35V | | |
| C 3 | Plast,(ECQ-M1H103KZ) | 0.01μF,±10%,50V | | |
| C 4 | Plast,(ECQ-M1H104KZ) | 0.1μF,±10%,50V | | |
| C 5 | Elect,(CE04C1E101) | 100μF,+100/-10%,25V | | |
| C 6 | Elect,(CE04W1E471) | 470μF,+100/-10%,25V | | |
| C 7 | Elect,(CE02W1J332) | 3300μF,+100/-10%,63V | | |
| C 8 | Elect,(CE04W1V471) | 470μF,+100/-10%,35V | | |
| C 9 | Plst,(ECQ-M1H224KZ) | 0.22μF,±10%,50V | | |
| C 10 | Elect,(CE04W1E471) | 470μF,±20%,25V | | |
| C 11 | Plast,(ECQ-M1H102KZ) | 0.001μF,±10%,50V | | |
| C 12 | Plast,(ECQ-M1H102KZ) | 0.001μF,±10%,50V | | |
| C 13 | Plast,(ECQ-M1H102KZ) | 0.001μF,±10%,50V | | |
| C 14 | Plast,(ECQ-M1H472KZ) | 0.0047μF,±10%,50V | | |
| C 15 | Plast,(ECQ-M1H222KZ) | 0.0022μF,±10%,50V | | |
| C 16 | Plast,(ECQ-M1H102KZ) | 0.001μF,±10%,50V | | |
| C 17 | Plast,(ECQ-M1H222KZ) | 0.0022μF,±10%,50V | | |
| C 18 | Plast,(ECQ-M1H102KZ) | 0.001μF,±10%,50V | | |
| C 19 | Plast,(ECQ-M1H104KZ) | 0.1μF,±10%,50V | | |
| C 20 | Plast,(ECQ-M1H222KZ) | 0.0022μF,±10%,50V | | |
| C 21 | Plast,(ECQ-M1H104KZ) | 0.1μF,±10%,50V | | |
| C 22 | Elect,(CE04C1C330) | 33μF,+100/-10%,16V | | |
| C 23 | Elect,(ECEA10V33T) | 33μF,10V | | |
| C 24 | Elect,(CE04C1C330) | 33μF,+100/-10%,16V | | |
| C 25 | Elect,(CE04C1C330) | 33μF,+100/-10%,16V | | |
| C 26 | Elect,(CE04C1C330) | 33μF,+100/-10%,16V | | |
| C 27 | Plast,(ECQ-M1H104KZ) | 0.1μF,±10%,50V | | |
| C 28 to C 44 | Cer,(CK924F1H104Z) | 0.1μF,+80/-20%,50V | | |
| C 45 | Plast,(ECQ-M1H102KZ) | 0.001μF,±10%,50V | | |
| C 46 | Plast,(ECQ-M1H103KZ) | 0.01μF,±10%,50V | | |
| F 1 | Fuse, (MF51NN250V3.15ADC01) | 3.15A,250V | | |
| F 2 | Fuse, (MF51NN250V0.5ADC01) | 0.5A,250V | | |
| F 3 | Fuse, (MF51NN250V0.1ADC01) | 0,1A,250V | | |
| J 1 | Connector,(U-SB2201) | | | |
| J 2 | Plug, (HIF3-26P-2.54DSA) | | | |
| J 3 | Connector,(PI011-02M) | | | |
| J 4 | Receptacle,(57-40500-D39) | | | |
| J 5 | Connector,(U-PA1021) | | | |

( ): Manufacturer's part number

* : Selected at factory

| CKT REF | DESCRIPTION | RATING | | NOTE |
|---|---|---|---|---|
| J 6 | Not assigned | | | |
| J 7 | Connector,(U-PA1021) | | | |
| K 1 | Electronic buzzer, (CMB-06) | | | |
| K 2 | Relay,(SF102T) | | | |
| L 1 | Coil,(SKC-105B) | 200μH | | |
| L 2 | Coil,(449T46058D) | 100μH | | |
| M 1 | Timer,(TM-0) | | | |
| Q 1 | Rectifier stack, (RB-402-LFD) | | | |
| Q 2 | Tr,Si,PNP,(2SA708) | | | |
| Q 3 | Tr,Si,NPN,(2SC1343H) | | | |
| Q 4 | Di,Si,(S10SC4) | | | |
| Q 5 | Di,breakdown,(RD5.1EB) | 4.8 to 5.4V,400mW | | |
| Q 6 | IC,(μPC141A) | | | |
| Q 7 | Di,breakdown,(RD6.2EB) | 5.8 to 6.6V,400mW | | |
| Q 8 | Rectifier stack, (RB152LFB) | | | |
| Q 9 | Rectifier stack, (RB152LFB) | | | |
| Q 10 | Tr,Si,PNP,(2SB505) | | | |
| Q 11 | Di,Si,(1S953) | | | |
| Q 12 | IC,(74LS290) | | | |
| Q 13 | IC,(74LS490) | | | |
| Q 14 | IC,(74LS123) | | | |
| Q 15 | IC,(74LS123) | | | |
| Q 16 | IC,(74LS00) | | | |
| Q 17 | IC,(74LS04) | | | |
| Q 18 | IC,(74LS10) | | | |
| Q 19 | IC,(74LS04) | | | |
| Q 20 | IC,(74LS74A) | | | |
| Q 21 | IC,(74LS290) | | | |
| Q 22 | IC,(74LS490) | | | |
| Q 23 | IC,(74LS123) | | | |
| Q 24 | IC,(74LS123) | | | |
| Q 25 | IC,(74LS00) | | | |

( ): Manufacturer's part number

* : Selected at factory

| CKT REF | DESCRIPTION | RATING | | NOTE |
|---|---|---|---|---|
| Q 26 | IC,(74LS10) | | | |
| Q 27 | IC,(74LS08) | | | |
| Q 28 | IC,(74LS00) | | | |
| Q 29 | IC,(74LS290) | | | |
| Q 30 | IC,(74LS490) | | | |
| Q 31 | IC,(74LS74A) | | | |
| Q 32 | IC,(74LS08) | | | |
| Q 33 | IC,(74LS153) | | | |
| Q 34 | IC,(74LS153) | | | |
| Q 35 | IC,(74LS490) | | | |
| Q 36 | IC,(74LS490) | | | |
| Q 37 | IC,(74LS74A) | | | |
| Q 38 | IC,(74LS10) | | | |
| Q 39 | IC,(74LS11) | | | |
| Q 40 | IC,(74LS54) | | | |
| Q 41 | IC,(74LS153) | | | |
| Q 42 | IC,(74LS153) | | | |
| Q 43 | IC,(74LS157) | | | |
| Q 44 | IC,(74LS75) | | | |
| Q 45 | IC,(74LS279) | | | |
| Q 46 | IC,(74LS04) | | | |
| Q 47 | IC,(74LS00) | | | |
| Q 48 | IC,(74LS00) | | | |
| Q 49 | IC,(7407) | | | |
| Q 50 | IC,(74LS174) | | | |
| Q 51 | IC,(74LS75) | | | |
| Q 52 | IC,(74LS283) | | | |
| Q 53 | IC,(74LS147) | | | |
| Q 54 | IC,(74LS00) | | | |
| Q 55 | IC,(TC4001BP) | | | |
| Q 56 | IC,(7407) | | | |
| Q 57 | IC,(74LS174) | | | |
| Q 58 | IC,(74LS75) | | | |
| Q 59 | IC,(74LS86) | | | |
| Q 60 | IC,(74LS08) | | | |
| Q 61 | IC,(74S00) | | | |
| Q 62 | IC,(74LS123) | | | |
| Q 63 | IC,(74LS74A) | | | |
| Q 74 | IC,(74S112) | | | |
| Q 65 | IC,(74S112) | | | |
| Q 66 | IC,(74S74) | | | |
| Q 67 | IC,(74LS08) | | | |
| Q 68 | IC,(74LS00) | | | |
| Q 69 | IC,(74LS00) | | | |
| Q 70 | IC,(74LS00) | | | |

( ): Manufacturer's part number

* : Selected at factory

| CKT REF | DESCRIPTION | RATING | | NOTE |
|---|---|---|---|---|
| Q 71 | IC,(74LS04) | | | |
| Q 72 | IC,(7438) | | | |
| Q 73 | IC,(μPC251C) | | | |
| Q 74 | IC,(74LS123) | | | |
| Q 75 | IC,(74LS00) | | | |
| R 1 | CF,(ARD25T680J) | 68Ω,±5%,1/4W | | |
| R 2 | CF,(ARD25T100J) | 10Ω,±5%,1/4W | | |
| R 3 | CF,(ARD25T102J) | 1kΩ,±5%,1/4W | | |
| R 4 | CF,(ARD25T220J) | 22Ω,±5%,1/4W | | |
| R 5 | CF,(ARD25T105J) | 1MΩ,±5%,1/4W | | |
| R 6 | CF,(ARD25T332J) | 3.3kΩ,±5%,1/4W | | |
| R 7 | CF,(ARD25T182J) | 1.8kΩ,±5%,1/4W | | |
| R 8 | Var,MF,(RJ-6P 1kΩ) | Max. 1kΩ,1/2W | | |
| R 9 | MF,(RN14K2E1001D) | 1kΩ,±0.5%,1/4W | | |
| R 10 | MF,(RN14K2E1001D) | 1kΩ,±0.5%,1/4W | | |
| R 11 | MF,(RN14K2E9091D) | 9.09kΩ,±0.5%,1/4W | | |
| R 12 | CF,(ARD25T105J) | 1MΩ,±5%,1/4W | | |
| R 13 | CF,(ARD25T102J) | 1kΩ,±5%,1/4W | | |
| R 14 | CF,(ARD25T221J) | 220Ω,±5%,1/4W | | |
| R 15 | CF,(ARD25T682J) | 6.8kΩ,±5%,1/4W | | |
| R 16 | CF,(ARD25T471J) | 470Ω,±5%,1/4W | | |
| R 17 | CF,(ARD25T221J) | 220Ω,±5%,1/4W | | |
| R 18 | CF,(ARD25T102J) | 1kΩ,±5%,1/4W | | |
| R 19 | CF,(ARD25T223J) | 22kΩ,±5%,1/4W | | |
| R 20 | CF,(ARD25T683J) | 68kΩ,±5%,1/4W | | |
| R 21 | CF,(ARD25T682J) | 6.8kΩ,±5%,1/4W | | |
| R 22 | CF,(ARD25T682J) | 6.8kΩ,±5%,1/4W | | |
| R 23 | CF,(ARD25T683J) | 68kΩ,±5%,1/4W | | |
| R 24 | CF,(ARD25T221J) | 220Ω,±5%,1/4W | | |
| R 25 | CF.(ARD25T221J) | 220Ω,±5%,1/4W | | |
| R 26 | CF,(ARD25T682J) | 6.8kΩ,±5%,1/4W | | |
| R 27 | CF,(ARD25T221J) | 220Ω,±5%,1/4W | | |
| R 28 | CF,(ARD25T473J) | 47kΩ,±5%,1/4W | | |
| R 29 | CF,(ARD25T154J) | 150kΩ,±5%,1/4W | | |
| R 30 | CF,(ARD25T221J) | 220Ω,±5%,1/4W | | |
| R 31 | CF,(ARD25T223J) | 22kΩ,±5%,1/4W | | |
| R 32 | CF,(ARD25T224J) | 220kΩ,±5%,1/4W | | |
| R 33 | MF,(RN14K2E1503D) | 150kΩ,±0.5%,1/4W | | |
| R 34 | MF,(RN14K2E7502D) | 75kΩ,±0.5%,1/4W | | |
| R 35 | MF,(RN14K2E3742D) | 37.4kΩ,±0.5%,1/4W | | |
| R 36 | MF,(RN14K2E3742D) | 37.4kΩ,±0.5%,1/4W | | |
| R 37 | MF,(RN14K2E1542D) | 15.4kΩ,±0.5%,1/4W | | |
| R 38 | MF,(RN14K2E1542D) | 15.4kΩ,±0.5%,1/4W | | |
| R 39 | MF,(RN14K2E1542D) | 15.4kΩ,±0.5%,1/4W | | |
| R 40 | Single-in,line type, array,(IHR-8-332JA) | 3.3kΩ×8,±5%,1/8W | | |

( ): Manufacturer's part number

* : Selected at factory

| CKT REF | DESCRIPTION | RATING | | NOTE |
|---|---|---|---|---|
| R 41 | Single-in,line type, array,(IHR-10-332JA) | 3.3kΩ×10,±5%,1/8W | | |
| R 42 | Single-in,line type, array,(IHR-8-332JA) | 3.3kΩ×8,±5%,1/8W | | |
| R 43 | CF,(ARD25T102J) | 1kΩ,±5%,1/4W | | |
| R 44 | CF,(ARD25T470J) | 47Ω,±5%,1/4W | | |
| R 45 | CF,(ARD25T470J) | 47Ω,±5%,1/4W | | |
| R 46 | CF,(ARD25T470J) | 47Ω,±5%,1/4W | | |
| R 47 | Single-in,line type, array(IHR-6-103JA) | 10kΩ×6,±5%,1/8W | | |
| R 48 | CF,(ARD25T470J) | 47Ω,±5%,1/4W | | |
| R 49 | CF,(ARD25T221J) | 220Ω,±5%,1/4W | | |
| R 50 | CF,(RD1/4PX0.87ΩJ) | 0.87Ω,±5%,1/4W | | |
| R 51 | MF,(RS1FB33ΩJ) | 33Ω,±5%,1W | | |
| R 52 | CF,(ARD25T683J) | 68kΩ,±5%,1/4W | | |
| S 1 | Pushbutton,(5F102UGr) | | | |
| S 2 | Pushbutton,(1F2UOA) | | | |
| S 3 | Pushbutton,(1F2UEE) | | | |
| S 4 | Pushbutton,(4F102UGr) | | | |
| S 5 | Pushbutton,(1F2UOA) | | | |
| S 6 | Pushbutton,(1F2UEE) | | | |

( ): Manufacturer's part number

* : Selected at factory

C.L. OF COUNTING CIRCUIT (WITH OPTION 44)

| CKT REF | DESCRIPTION | RATING | | NOTE |
|---|---|---|---|---|
| C 1 | Elect,(CE02W1V472) | 4700μF,±20%,35V | | |
| C 2 | Elect,(CE02C1V471) | 470μF,±20%,35V | | |
| C 3 | Plast,(ECQ-M1H103KZ) | 0.01μF,±10%,50V | | |
| C 4 | Plast,(ECQ-M1H104KZ) | 0.1μF,±10%,50V | | |
| C 5 | Elect,(CE04C1E101) | 100μF,±20%,25V | | |
| C 6 | Elect,(CE04W1E471) | 470μF,±20%,25V | | |
| C 7 | Elect,(CE02W1J332) | 3300μF,±20%,63V | | |
| C 8 | Elect,(CE04W1V471) | 470μF,±20%,35V | | |
| C 9 | Plast,(ECQ-M1H224KZ) | 0.22μF,±10%,50V | | |
| C10 | Elect,(CE04W1E471) | 470μF,±20%,25V | | |
| C11 | Plast,(ECQ-M1H102KZ) | 1000pF,±10%,50V | | |
| C12 | Plast,(ECQ-M1H102KZ) | 1000pF,±10%,50V | | |
| C13 | Plast,(ECQ-M1H102KZ) | 1000pF,±10%,50V | | |
| C14 | Plast,(ECQ-M1H472KZ) | 4700pF,±10%,50V | | |
| C15 | Plast,(ECQ-M1H222KZ) | 2200pF,±10%,50V | | |
| C16 | Plast,(ECQ-M1H102KZ) | 1000pF,±10%,50V | | |
| C17 | Plast,(ECQ-M1H222KZ) | 2200pF,±10%,50V | | |
| C18 | Plast,(ECQ-M1H102KZ) | 1000pF,±10%,50V | | |
| C19 | Plast,(ECQ-M1H104KZ) | 0.1μF,±10%,50V | | |
| C20 | Plast,(ECQ-M1H222KZ) | 2200pF,±10%,50V | | |
| C21 | Plast,(ECQ-M1H104KZ) | 0.1μF,±10%,50V | | |
| C22 | Elect,(CE04C1C330) | 33μF,±20%,16V | | |
| C23 | Elect,(ECEA10V33T) | 33μF,±20%,10V | | |
| C24 | Elect,(CE04C1C330) | 33μF,±20%,16V | | |
| C25 | Elect,(CE04C1C330) | 33μF,±20%,16V | | |
| C26 | Elect,(CE04C1C330) | 33μF,±20%,16V | | |
| C27 | Plast,(ECQ-M1H104KZ) | 0.1μF,±10%,50V | | |
| C28 to C44 | Cer,(CK924F1H104KZ) | 0.1μF,±10%,50V | | |
| C45 | Plast,(ECQ-M1H102KZ) | 1000pF,±10%,50V | | |
| C46 | Plast,(ECQ-M1H103KZ) | 0.01μF,±10%,50V | | |
| F 1 | Fuse, (MF51NN250V3.15ADC01) | 3.15A,250V | | |
| F 2 | Fuse, (MF51NN250V1ADC01) | 1A,250V | | |
| F 3 | Fuse, (MF51NN250V0.1ADC01) | 0.1A,250V | | |
| J 1 | Connector,(U-SB2201) | | | |
| J 2 | Plug, (HIF3-26P-2.54DSA) | | | |
| J 3 | Connector,(PI011-2M) | | | |

( ): Manufacturer's part number

* : Selected at factory



172

C.L. OF COUNTING CIRCUIT (WITH OPTION 44)

| CKT REF | DESCRIPTION | RATING | | NOTE |
|---|---|---|---|---|
| J 4 | Connector, (57-40500-D39) | | | |
| J 5 | Connector,(U-PA1021) | | | |
| J 6 | Plug, (HIF3-30P-2.54DSA) | | | |
| J 7 | Not assigned | | | |
| J 8 | Connector,(PI011-2M) | | | |
| K 1 | Electronic Buzzer, (CMB-06) | | | |
| L 1 | Coil,(SKC-105B) | 200μH | | |
| L 2 | Coil,(449T46058D) | 100μH | | |
| M 1 | Timer,(TM-0) | | | |
| Q 1 | Rectifier,(RB-402-LFD) | | | |
| Q 2 | Tr,(2SA708) | | | |
| Q 3 | Tr,(2SC1343H) | | | |
| Q 4 | Di,(S10SC4) | | | |
| Q 5 | Di,breakdown,(RD5.1EB) | 4.8 to 5.4V,400mW | | |
| Q 6 | IC,(μPC141A) | | | |
| Q 7 | Di,breakdown,(RD6.2EB) | 5.8 to 6.6V,400mW | | |
| Q 8 | Rectifier,(RB152LBF) | | | |
| Q 9 | Rectifier,(RB152LBF) | | | |
| Q10 | Tr,(2SB505) | | | |
| Q11 | Not assigned | | | |
| Q12 | IC,(74LS290) | | | |
| Q13 | IC,(74LS490) | | | |
| Q14 | IC,(74LS123) | | | |
| Q15 | IC,(74LS123) | | | |
| Q16 | IC,(74LS00) | | | |
| Q17 | IC,(74LS04) | | | |
| Q18 | IC,(74LS10) | | | |
| Q19 | IC,(74LS04) | | | |
| Q20 | IC,(74LS74A) | | | |
| Q21 | IC,(74LS290) | | | |
| Q22 | IC,(74LS490) | | | |
| Q23 | IC,(74LS123) | | | |
| Q24 | IC,(74LS123) | | | |
| Q25 | IC,(74LS00) | | | |

( ): Manufacturer's part number

* : Selected at factory

| CKT REF | DESCRIPTION | RATING | | NOTE |
|---|---|---|---|---|
| Q26 | IC,(74LS10) | | | |
| Q27 | IC,(74LS08) | | | |
| Q28 | IC,(74LS00) | | | |
| Q29 | IC,(74LS290) | | | |
| Q30 | IC,(74LS490) | | | |
| Q31 | IC,(74LS74A) | | | |
| Q32 | IC,(74LS08) | | | |
| Q33 | IC,(74LS153) | | | |
| Q34 | IC,(74LS153) | | | |
| Q35 | IC,(74LS490) | | | |
| Q36 | IC,(74LS490) | | | |
| Q37 | IC,(74LS74A) | | | |
| Q38 | IC,(74LS10) | | | |
| Q39 | IC,(74LS11) | | | |
| Q40 | IC,(74LS54) | | | |
| Q41 | IC,(74LS153) | | | |
| Q42 | IC,(74LS153) | | | |
| Q43 | IC,(74LS157) | | | |
| Q44 | IC,(74LS75) | | | |
| Q45 | IC,(74LS279) | | | |
| Q46 | IC,(74LS04) | | | |
| Q47 | IC,(74LS00) | | | |
| Q48 | IC,(74LS00) | | | |
| Q49 | IC,(7407) | | | |
| Q50 | IC,(74LS174) | | | |
| Q51 | IC,(74LS75) | | | |
| Q52 | IC,(74LS283) | | | |
| Q53 | IC,(74LS147) | | | |
| Q54 | IC,(74LS00) | | | |
| Q55 | IC,(TC4001BP) | | | |
| Q56 | IC,(7407) | | | |
| Q57 | IC,(74LS174) | | | |
| Q58 | IC,(74LS75) | | | |
| Q59 | IC,(74LS86) | | | |
| Q60 | IC,(74LS08) | | | |
| Q61 | IC,(74S00) | | | |
| Q62 | IC,(64LS123) | | | |
| Q63 | IC,(74LS74A) | | | |
| Q64 | IC,(74S112) | | | |
| Q65 | IC,(74S112) | | | |
| Q66 | IC,(74S74) | | | |
| Q67 | IC,(74LS08) | | | |
| Q68 | IC,(74LS00) | | | |
| Q69 | IC,(74LS00) | | | |
| Q70 | IC,(74LS00) | | | |

( ): Manufacturer's part number

* : Selected at factory

C.L. OF COUNTING CIRCUIT (WITH OPTION 44)

| CKT REF | DESCRIPTION | RATING | | NOTE |
|---|---|---|---|---|
| Q71 | IC,(74LS04) | | | |
| Q72 | IC,(7438) | | | |
| Q73 | IC,(μPC251C) | | | |
| Q74 | IC,(74LS123) | | | |
| Q75 | IC,(74LS00) | | | |
| R 1 | CF,(ARD25T680J) | 68Ω,±5%,1/4W | | |
| R 2 | CF,(ARD25T100J) | 10Ω,±5%,1/4W | | |
| R 3 | CF,(ARD25T102J) | 1kΩ,±5%,1/4W | | |
| R 4 | CF,(ARD25T220J) | 22Ω,±5%,1/4W | | |
| R 5 | CF,(ARD25T105J) | 1MΩ,±5%,1/4W | | |
| R 6 | CF,(ARD25T332J) | 3.3kΩ,±5%,1/4W | | |
| R 7 | CF,(ARD25T182J) | 1.8kΩ,±5%,1/4W | | |
| R 8 | Var,MF,(RJ-6P 1kΩ) | 1kΩ,1/2W | | |
| R 9 | MF,(RN14K2E1001D) | 1kΩ,±0.5%,1/4W | | |
| R10 | MF,(RN14K2E1001D) | 1kΩ,±0.5%,1/4W | | |
| R11 | MF,(RN14K2E9091D) | 9.09kΩ,±0.5%,1/4W | | |
| R12 | CF,(ARD25T105J) | 1MΩ,±5%,1/4W | | |
| R13 | CF,(ARD25T102J) | 1kΩ,±5%,1/4W | | |
| R14 | CF,(ARD25T221J) | 220Ω,±5%,1/4W | | |
| R15 | CF,(ARD25T682J) | 6.8kΩ,±5%,1/4W | | |
| R16 | CF,(ARD25T471J) | 470Ω,±5%,1/4W | | |
| R17 | CF,(ARD25T221J) | 220Ω,±5%,1/4W | | |
| R18 | CF,(ARD25T102J) | 1kΩ,±5%,1/4W | | |
| R19 | CF,(ARD25T223J) | 22kΩ,±5%,1/4W | | |
| R20 | CF,(ARD25T683J) | 68kΩ,±5%,1/4W | | |
| R21 | CF,(ARD25T682J) | 6.8kΩ,±5%,1/4W | | |
| R22 | CF,(ARD25T682J) | 6.8kΩ,±5%,1/4W | | |
| R23 | CF,(ARD25T683J) | 68kΩ,±5%,1/4W | | |
| R24 | CF,(ARD25T221J) | 220Ω,±5%,1/4W | | |
| R25 | CF,(ARD25T221J) | 220Ω,±5%,1/4W | | |
| R26 | CF,(ARD25T682J) | 6.8kΩ,±5%,1/4W | | |
| R27 | CF,(ARD25T221J) | 220Ω,±5%,1/4W | | |
| R28 | CF,(ARD25T473J) | 47kΩ,±5%,1/4W | | |
| R29 | CF,(ARD25T154J) | 150kΩ,±5%,1/4W | | |
| R30 | CF,(ARD25T221J) | 220Ω,±5%,1/4W | | |
| R31 | CF,(ARD25T223J) | 22kΩ,±5%,1/4W | | |
| R32 | CF,(ARD25T224J) | 220kΩ,±5%,1/4W | | |
| R33 | MF,(RN14K2E1503D) | 150kΩ,±0.5%,1/4W | | |
| R34 | MF,(RN14K2E7502D) | 75kΩ,±0.5%,1/4W | | |
| R35 | MF,(RN14K2E3742D) | 37.4kΩ,±0.5%,1/4W | | |
| R36 | MF,(RN14K2E3742D) | 37.4kΩ,±0.5%,1/4W | | |
| R37 | MF,(RN14K2E1542D) | 15.4kΩ,±0.5%,1/4W | | |
| R38 | MF,(RN14K2E1542D) | 15.4kΩ,±0.5%,1/4W | | |

( ): Manufacturer's part number

* : Selected at factory

C.L. OF COUNTING CIRCUIT (WITH OPTION 44)

| CKT REF | DESCRIPTION | RATING | | NOTE |
|---|---|---|---|---|
| R39 | MF,(RN14K2E1542D) | 15.4kΩ,±0.5%,1/4W | | |
| R40 | Single in-line array, (IHR-8-332JA) | 3.3kΩ x 8,1/8W | | |
| R41 | Single in-line array, (IHR-10-332JA) | 3.3kΩ x 10,1/8W | | |
| R42 | Single in-line array, (IHR-8-332JA) | 3.3kΩ x 8,1/8W | | |
| R43 | CF,(ARD25T102J) | 1kΩ,±5%,1/4W | | |
| R44 | CF,(ARD25T470J) | 47Ω,±5%,1/4W | | |
| R45 | CF,(ARD25T470J) | 47Ω,±5%,1/4W | | |
| R46 | CF,(ARD25T470J) | 47Ω,±5%,1/4W | | |
| R47 | Single in-line array, (IHR-6-103JA) | 10kΩ x 6,1/8W | | |
| R48 | CF,(ARD25T470J) | 47Ω,±5%,1/4W | | |
| R49 | CF,(ARD25T221J) | 220Ω,±5%,1/4W | | |
| R50 | CF,(RD1/4PX 0.87ΩJ) | 0.87Ω,±5%,1/4W | | |
| R51 | MF,(RS1FB 33ΩJ) | 33Ω,±5%,1W | | |
| R52 | CF,(ARD25T683J) | 68kΩ,±5%,1/4W | | |
| S 1 | Pushbutton,(5F102UGr) | | | |
| S 2 | Pushbutton,(1F2UOA) | | | |
| S 3 | Pushbutton,(1F2UEE) | | | |
| S 4 | Pushbutton,(4F102UGr) | | | |
| S 5 | Pushbutton,(1F2UOA) | | | |
| S 6 | Pushbutton,(1F2UEE) | | | |

( ): Manufacturer's part number

* : Selected at factory

C.L. OF COUNTING CIRCUIT (WITH OPTION 44 + 45)

| CKT REF | DESCRIPTION | RATING | | NOTE |
|---|---|---|---|---|
| C 1 | Elect,(CE02W1V472) | 4700μF,±20%,35V | | |
| C 2 | Elect,(CE02C1V471) | 470μF,±20%,35V | | |
| C 3 | Plast,(ECQ-M1H103KZ) | 0.01μF,±10%,50V | | |
| C 4 | Plast,(ECQ-M1H104KZ) | 0.1μF,±10%,50V | | |
| C 5 | Elect,(CE04C1E101) | 100μF,±20%,25V | | |
| C 6 | Elect,(CE04W1E471) | 470μF,±20%,25V | | |
| C 7 | Elect,(CE02W1J332) | 3300μF,±20%,63V | | |
| C 8 | Elect,(CE04W1V471) | 470μF,±20%,35V | | |
| C 9 | Plast,(ECQ-M1H224KZ) | 0.22μF,±10%,50V | | |
| C10 | Elect,(CE04W1E471) | 470μF,±20%,25V | | |
| C11 | Plast,(ECQ-M1H102KZ) | 1000pF,±10%,50V | | |
| C12 | Plast,(ECQ-M1H102KZ) | 1000pF,±10%,50V | | |
| C13 | Plast,(ECQ-M1H102KZ) | 1000pF,±10%,50V | | |
| C14 | Plast,(ECQ-M1H472KZ) | 4700pF,±10%,50V | | |
| C15 | Plast,(ECQ-M1H222KZ) | 2200pF,±10%,50V | | |
| C16 | Plast,(ECQ-M1H102KZ) | 1000pF,±10%,50V | | |
| C17 | Plast,(ECQ-M1H222KZ) | 2200pF,±10%,50V | | |
| C18 | Plast,(ECQ-M1H102KZ) | 1000pF,±10%,50V | | |
| C19 | Plast,(ECQ-M1H104KZ) | 0.1μF,±10%,50V | | |
| C20 | Plast,(ECQ-M1H222KZ) | 2200pF,±10%,50V | | |
| C21 | Plast,(ECQ-M1H104KZ) | 0.1μF,±10%,50V | | |
| C22 | Elect,(CE04C1C330) | 33μF,±20%,16V | | |
| C23 | Elect,(ECEA10V33T) | 33μF,±20%,10V | | |
| C24 | Elect,(CE04C1C330) | 33μF,±20%,16V | | |
| C25 | Elect,(CE04C1C330) | 33μF,±20%,16V | | |
| C26 | Elect,(CE04C1C330) | 33μF,±20%,16V | | |
| C27 | Plast,(ECQ-M1H104KZ) | 0.1μF,±10%,50V | | |
| C28 to C44 | Cer,(CK924F1H104Z) | 0.1μF,+80/-20%,50V | | |
| C45 | Plast,(ECQ-M1H102KZ) | 1000pF,±10%,50V | | |
| C46 | Plast,(ECQ-M1H103KZ) | 0.01μF,±10%,50V | | |
| F 1 | Fuse, (MF51NN250V3.15ADC01) | 3.15A,250V | | |
| F 2 | Fuse, (MF51NN250V1ADC01) | 1A,250V | | |
| F 3 | Fuse, (MF51NN250V0.1ADC01) | 0.1A,250V | | |
| J 1 | Connector,(U-SB2201) | | | |
| J 2 | Plug, (HIF3-26P-2.54DSA) | | | |

( ): Manufacturer's part number

* : Selected at factory

C.L. OF COUNTING CIRCUIT (WITH OPTION 44 + 45)

| CKT REF | DESCRIPTION | RATING | | NOTE |
|---|---|---|---|---|
| J 3 | Connector,(PI011-2M) | | | |
| J 4 | Connector, (57-40500-D39) | | | |
| J 5 | Connector,(U-PA1021) | | | |
| J 6 | Plug, (HIF3-30P-2.54DSA) | | | |
| J 7 | Connector,(U-PA1021) | | | |
| J 8 | Connector,(PI011-2M) | | | |
| K 1 | Electronic buzzer, (CMB-06) | | | |
| K 2 | Relay,(SF102T) | | | |
| L 1 | Coil,(SKC-105B) | 200μH | | |
| L 2 | Coil,(449T46058D) | 100μH | | |
| M 1 | Timer,(TM-0) | | | |
| Q 1 | Rectifier,(RB-402-LFD) | | | |
| Q 2 | Tr,(2SA708) | | | |
| Q 3 | Tr,(2SC1343H) | | | |
| Q 4 | Di,(S10SC4) | | | |
| Q 5 | Di,breakdown,(RD5.1EB) | 4.8 to 5.4V,400mW | | |
| Q 6 | IC,(μPC141A) | | | |
| Q 7 | Di,breakdown,(RD6.2EB) | 5.8 to 6.6V,400mW | | |
| Q 8 | Rectifier,(RB152LFB) | | | |
| Q 9 | Rectifier,(RB152LFB) | | | |
| Q10 | Tr,(2SB505) | | | |
| Q11 | Di,(1S953) | | | |
| Q12 | IC,(74LS290) | | | |
| Q13 | IC,(74LS490) | | | |
| Q14 | IC,(74LS123) | | | |
| Q15 | IC,(74LS123) | | | |
| Q16 | IC,(74LS00) | | | |
| Q17 | IC,(74LS04) | | | |
| Q18 | IC,(74LS10) | | | |
| Q19 | IC,(74LS04) | | | |
| Q20 | IC,(74LS74A) | | | |
| Q21 | IC,(74LS290) | | | |
| Q22 | IC,(74LS490) | | | |

( ): Manufacturer's part number

* : Selected at factory

C.L. OF COUNTING CIRCUIT (WITH OPTION 44 + 45)

| CKT REF | DESCRIPTION | RATING | | NOTE |
|---|---|---|---|---|
| Q23 | IC,(74LS123) | | | |
| Q24 | IC,(74LS123) | | | |
| Q25 | IC,(74LS00) | | | |
| Q26 | IC,(74LS10) | | | |
| Q27 | IC,(74LS08) | | | |
| Q28 | IC,(74LS00) | | | |
| Q29 | IC,(74LS290) | | | |
| Q30 | IC,(74LS490) | | | |
| Q31 | IC,(74LS74A) | | | |
| Q32 | IC,(74LS08) | | | |
| Q33 | IC,(74LS153) | | | |
| Q34 | IC,(74LS153) | | | |
| Q35 | IC,(74LS490) | | | |
| Q36 | IC,(74LS490) | | | |
| Q37 | IC,(74LS74A) | | | |
| Q38 | IC,(74LS10) | | | |
| Q39 | IC,(74LS11) | | | |
| Q40 | IC,(74LS54) | | | |
| Q41 | IC,(74LS153) | | | |
| Q42 | IC,(74LS153) | | | |
| Q43 | IC,(74LS157) | | | |
| Q44 | IC,(74LS75) | | | |
| Q45 | IC,(74LS279) | | | |
| Q46 | IC,(74LS04) | | | |
| Q47 | IC,(74LS00) | | | |
| Q48 | IC,(74LS00) | | | |
| Q49 | IC,(7407) | | | |
| Q50 | IC,(74LS174) | | | |
| Q51 | IC,(74LS75) | | | |
| Q52 | IC,(74LS283) | | | |
| Q53 | IC,(74LS147) | | | |
| Q54 | IC,(74LS00) | | | |
| Q55 | IC,(TC4001BP) | | | |
| Q56 | IC,(7407) | | | |
| Q57 | IC,(74LS174) | | | |
| Q58 | IC,(74LS75) | | | |
| Q59 | IC,(74LS86) | | | |
| Q60 | IC,(74LS08) | | | |
| Q61 | IC,(74S00) | | | |
| Q62 | IC,(74LS123) | | | |
| Q63 | IC,(74LS74A) | | | |
| Q64 | IC,(74S112) | | | |
| Q65 | IC,(74S112) | | | |
| Q66 | IC,(74S74) | | | |
| Q67 | IC,(74LS08) | | | |

( ): Manufacturer's part number

* : Selected at factory

C.L. OF COUNTING CIRCUIT (WITH OPTION 44 + 45)

| CKT REF | DESCRIPTION | RATING | | NOTE |
|---|---|---|---|---|
| Q68 | IC,(74LS00) | | | |
| Q69 | IC,(74LS00) | | | |
| Q70 | IC,(74LS00) | | | |
| Q71 | IC,(74LS04) | | | |
| Q72 | IC,(7438) | | | |
| Q73 | IC,(μPC251C) | | | |
| Q74 | IC,(74LS123) | | | |
| Q75 | IC,(74LS00) | | | |
| R 1 | CF,(ARD25T680J) | 68Ω,±5%,1/4W | | |
| R 2 | CF,(ARD25T100J) | 10Ω,±5%,1/4W | | |
| R 3 | CF,(ARD25T102J) | 1kΩ,±5%,1/4W | | |
| R 4 | CF,(ARD25T220J) | 22Ω,±5%,1/4W | | |
| R 5 | CF,(ARD25T105J) | 1MΩ,±5%,1/4W | | |
| R 6 | CF,(ARD25T332J) | 3.3kΩ,±5%,1/4W | | |
| R 7 | CF,(ARD25T182J) | 1.8kΩ,±5%,1/4W | | |
| R 8 | Var,MF,(RJ-6P 1kΩ) | 1kΩ,1/2W | | |
| R 9 | MF,(RN14K2E1001D) | 1kΩ,±0.5%,1/4W | | |
| R10 | MF,(RN14K2E1001D) | 1kΩ,±0.5%,1/4W | | |
| R11 | MF,(RN14K2E9091D) | 9.09kΩ,±0.5%,1/4W | | |
| R12 | CF,(ARD25T105J) | 1MΩ,±5%,1/4W | | |
| R13 | CF,(ARD25T102J) | 1kΩ,±5%,1/4W | | |
| R14 | CF,(ARD25T221J) | 220Ω,±5%,1/4W | | |
| R15 | CF,(ARD25T682J) | 6.8kΩ,±5%,1/4W | | |
| R16 | CF,(ARD25T471J) | 470Ω,±5%,1/4W | | |
| R17 | CF,(ARD25T221J) | 220Ω,±5%,1/4W | | |
| R18 | CF,(ARD25T102J) | 1kΩ,±5%,1/4W | | |
| R19 | CF,(ARD25T223J) | 22kΩ,±5%,1/4W | | |
| R20 | CF,(ARD25T683J) | 68kΩ,±5%,1/4W | | |
| R21 | CF,(ARD25T682J) | 6.8kΩ,±5%,1/4W | | |
| R22 | CF,(ARD25T682J) | 6.8kΩ,±5%,1/4W | | |
| R23 | CF,(ARD25T683J) | 68kΩ,±5%,1/4W | | |
| R24 | CF,(ARD25T221J) | 220Ω,±5%,1/4W | | |
| R25 | CF,(ARD25T221J) | 220Ω,±5%,1/4W | | |
| R26 | CF,(ARD25T682J) | 6.8kΩ,±5%,1/4W | | |
| R27 | CF,(ARD25T221J) | 220Ω,±5%,1/4W | | |
| R28 | CF,(ARD25T473J) | 47kΩ,±5%,1/4W | | |
| R29 | CF,(ARD25T154J) | 150kΩ,±5%,1/4W | | |
| R30 | CF,(ARD25T221J) | 220Ω,±5%,1/4W | | |
| R31 | CF,(ARD25T223J) | 22kΩ,±5%,1/4W | | |
| R32 | CF,(ARD25T224J) | 220kΩ,±5%,1/4W | | |
| R33 | MF,(RN14K2E1503D) | 150kΩ,±0.5%,1/4W | | |
| R34 | MF,(RN14K2E7502D) | 75kΩ,±0.5%,1/4W | | |
| R35 | MF,(RN14K2E3742D) | 37.4kΩ,±0.5%,1/4W | | |

( ): Manufacturer's part number

* : Selected at factory

C.L. OF COUNTING CIRCUIT (WITH OPTION 44 + 45)

| CKT REF | DESCRIPTION | RATING | | NOTE |
|---|---|---|---|---|
| R36 | MF,(RN14K2E3742D) | 37.4kΩ,±0.5%,1/4W | | |
| R37 | MF,(RN14K2E1542D) | 15.4kΩ,±0.5%,1/4W | | |
| R38 | MF,(RN14K2E1542D) | 15.4kΩ,±0.5%,1/4W | | |
| R39 | MF,(RN14K2E1542D) | 15.4kΩ,±0.5%,1/4W | | |
| R40 | Single in-line array, (IHR-8-332JA) | 3.3kΩ x 8,1/8W | | |
| R41 | Single in-line array, (IHR-10-332JA) | 3.3kΩ x 10,1/8W | | |
| R42 | Single in-line array, (IHR-8-332JA) | 3.3kΩ x 8,1/8W | | |
| R43 | CF,(ARD25T102J) | 1kΩ,±5%,1/4W | | |
| R44 | CF,(ARD25T470J) | 47Ω,±5%,1/4W | | |
| R45 | CF,(ARD25T470J) | 47Ω,±5%,1/4W | | |
| R46 | CF,(ARD25T470J) | 47Ω,±5%,1/4W | | |
| R47 | Single in-line array, (IHR-6-103JA) | 10kΩ x 6,1/8W | | |
| R48 | CF,(ARD25T470J) | 47Ω,±5%,1/4W | | |
| R49 | CF,(ARD25T221J) | 220Ω,±5%,1/4W | | |
| R50 | CF,(RD1/4PX 0.87ΩJ) | 0.87Ω,±5%,1/4W | | |
| R51 | MF,(RS1FB 33ΩJ) | 33Ω,±5%,1W | | |
| R52 | CF,(ARD25T683J) | 68kΩ,±5%,1/4W | | |
| S 1 | Pushbutton,(5F102UGr) | | | |
| S 2 | Pushbutton,(1F2UOA) | | | |
| S 3 | Pushbutton,(1F2UEE) | | | |
| S 4 | Pushbutton,(4F102UGr) | | | |
| S 5 | Pushbutton,(1F2UOA) | | | |
| S 6 | Pushbutton,(1F2UEE) | | | |

( ): Manufacturer's part number

* : Selected at factory

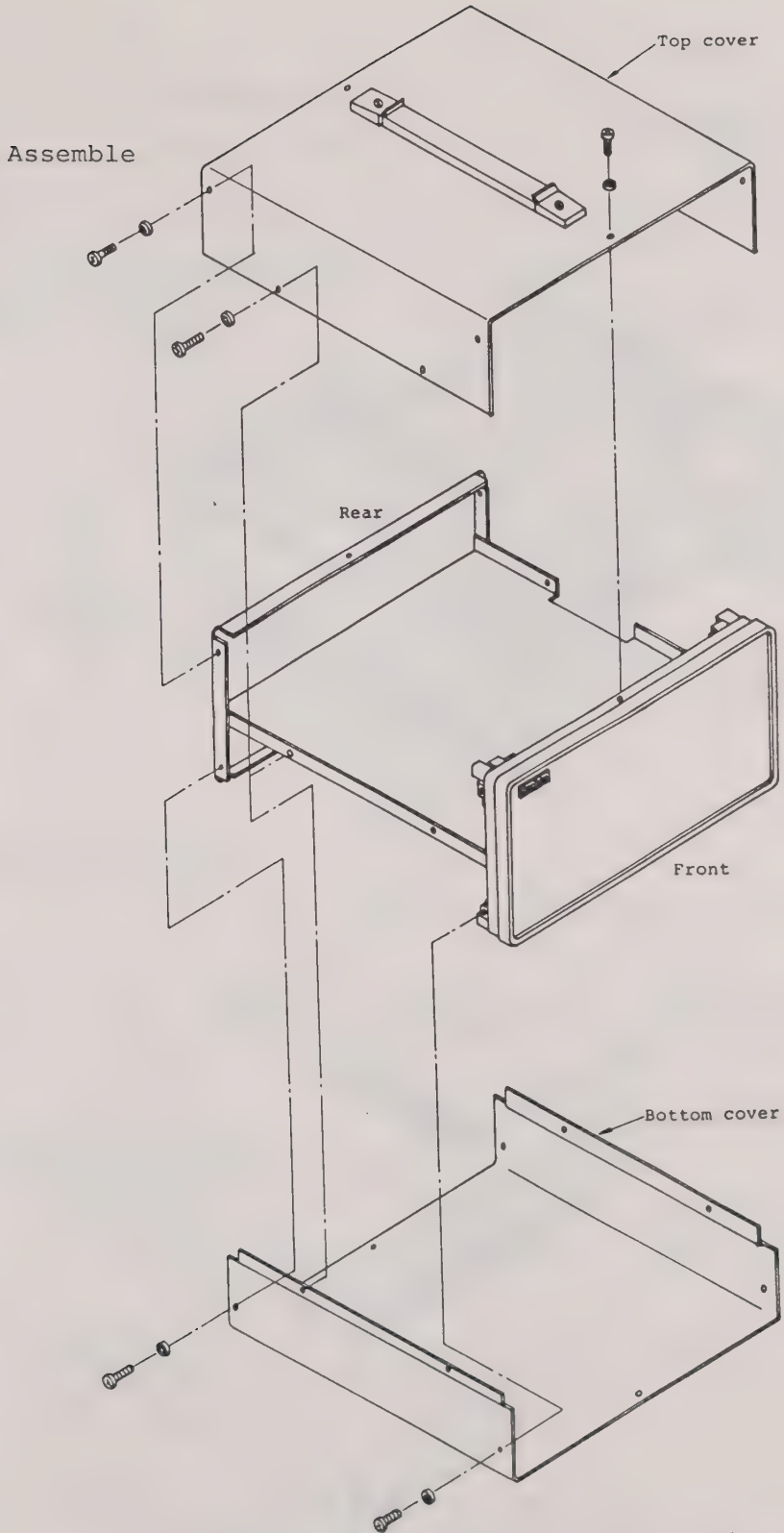


ME448B Sending and Receiving Units Disassembly

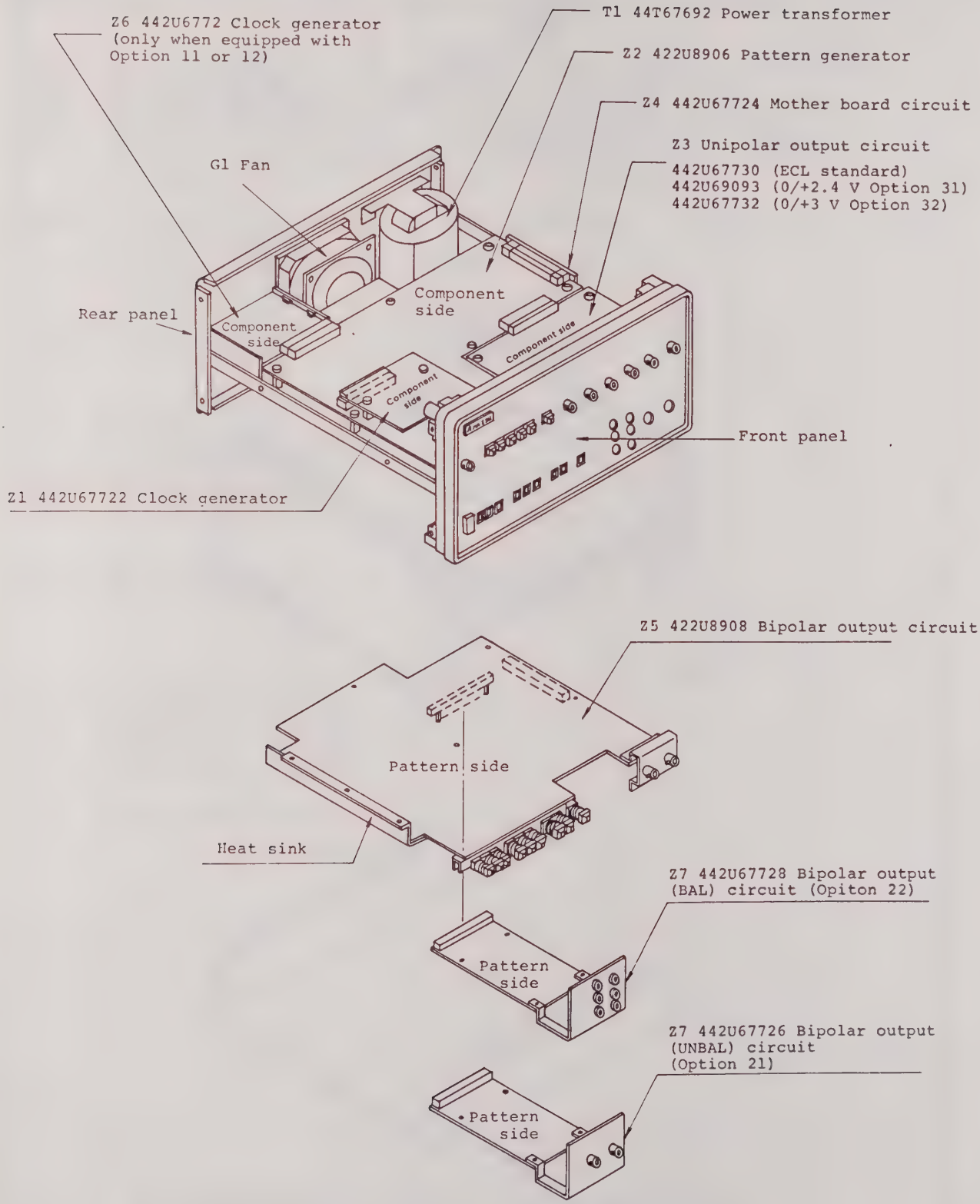


ME448B Sending Unit Assembly

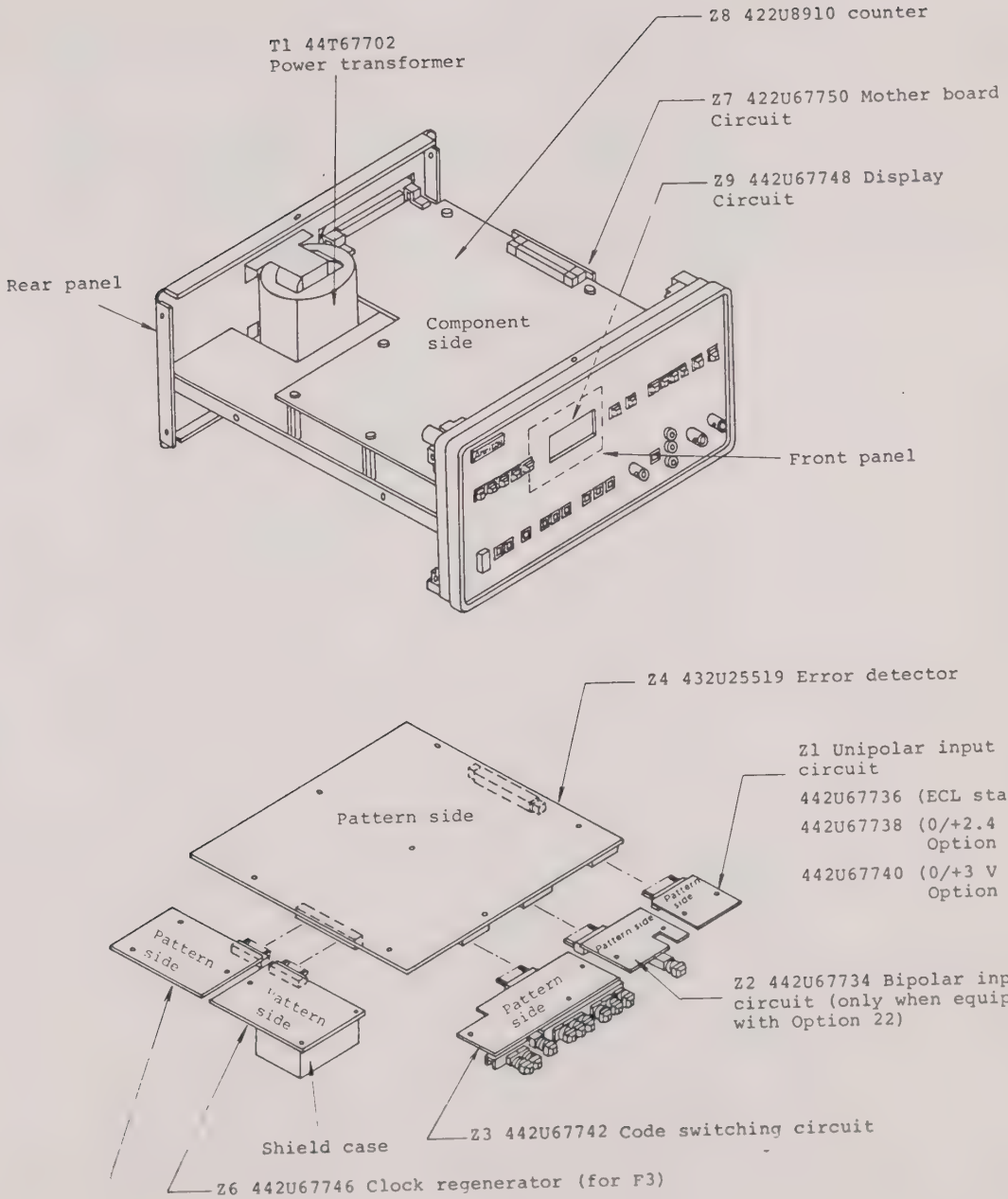


ME448B Receiving Unit Assembly

# APPENDIX

1. Mounting the Option 11/12 clock regenerator printed circuit board

   Remove the cover marked CLOCK (OPTION) at the rear of the ME448B sending unit, insert Z6 (422U67722) into the side slots, and connect J1 of Z6 into the internal printed circuit board jack as shown in Fig. A-1. Replace the cover.

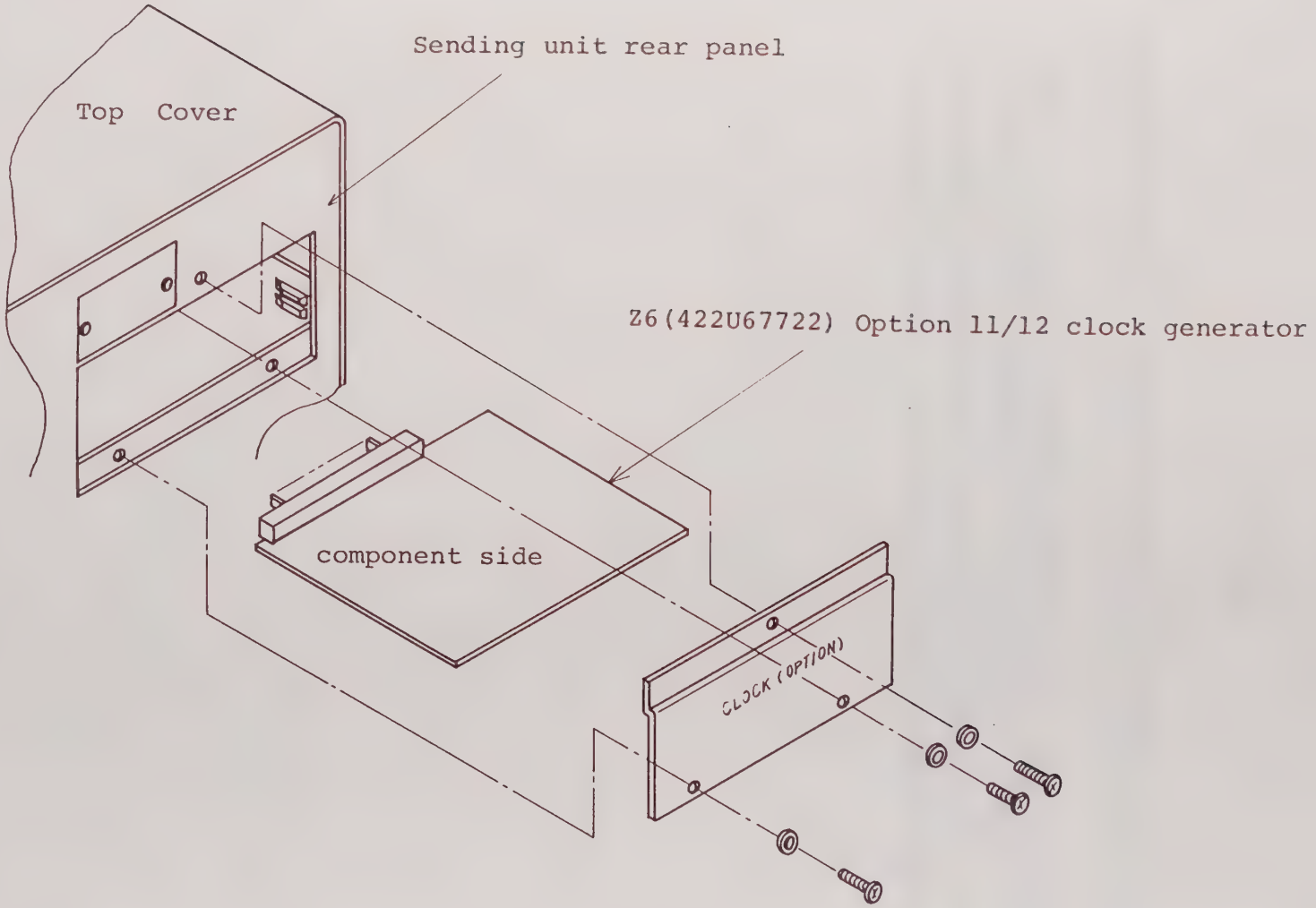


Fig. A-1 Inserting the Option Clock Generator Printed Circuit Board

# INSTRUCTION MANUAL

# GP-IB INTERFACE

CONTENTS


| | Page |
|---|---|
| SECTION 1 GENERAL ..... | 1 |
| SECTION 2 COMPONENTS AND SPECIFICATIONS ..... | 1 |
| 2.1 Composition ..... | 1 |
| 2.2 Specifications ..... | 2 |
| SECTION 3 PRINCIPLES OF OPERATION ..... | 3 |
| SECTION 4 OPERATION ..... | 3 |
| 4.1 Operating Points ..... | 3 |
| 4.2 Preliminary Operation ..... | 4 |
| 4.3 Measurements ..... | 5 |

# SECTION 1 GENERAL

The GP-IB interface is an interface bus that meets IEEE 488/IEC625-1 standards and is installed in the receiving unit of the ME518A, ME448A, and ME448B as an option. It has measurement item setting and measurement data transmission functions enabling measurement automation and data collection and analysis are possible.

# SECTION 2 COMPONENTS AND SPECIFICATIONS

## 2.1 Composition

Table 2.1 Standard Composition

| Item | Name | Quantity | |
|---|---|---|---|
| Instrument | GP-IB interface | 1 | The GP-IB interface is mounted on the receiving unit of the ME518A, ME448A, or ME448B. |
| Accessories | Instruction manual | 1 | |

o Optional Accessories

GP-IB cable
GP-IB/IEC-IB conversion connector

## 2.2 Specifications

Table 2.2 Specifications

| | |
|---|---|
| Interface | Complies with IEEE Standard 488, IEC Standard 625-1 |
| Interface functions | SH1: All functions of SH<br>AH1: All functions of AH<br>T5: Basic talker function.<br>Serial polling function.<br>Talker only mode function.<br>Talker release by MLA.<br>L3: Basic listener function.<br>Listener only mode function.<br>Listener release by MTA.<br>SR1: All functions of SR<br>RL1: All functions of RL<br>PP0: No PP functions<br>DC0: No DC functions<br>DT0: No DT functions<br>C0: No C functions |
| Items that can be set by GP-IB | COUNT TIME: $10^7$, $10^8$, $10^9$, MANUAL<br>HOLD TIME: 1 SEC, 0 SEC<br>START/STOP<br>RESET |
| Address | Address Nos. 0 to 30. Talker only mode and listener only mode. |
| GP-IB connector | 24 pins |
| Ambient temperature, rated range of use | 0 to 50°C |

## SECTION 3 PRINCIPLES OF OPERATION

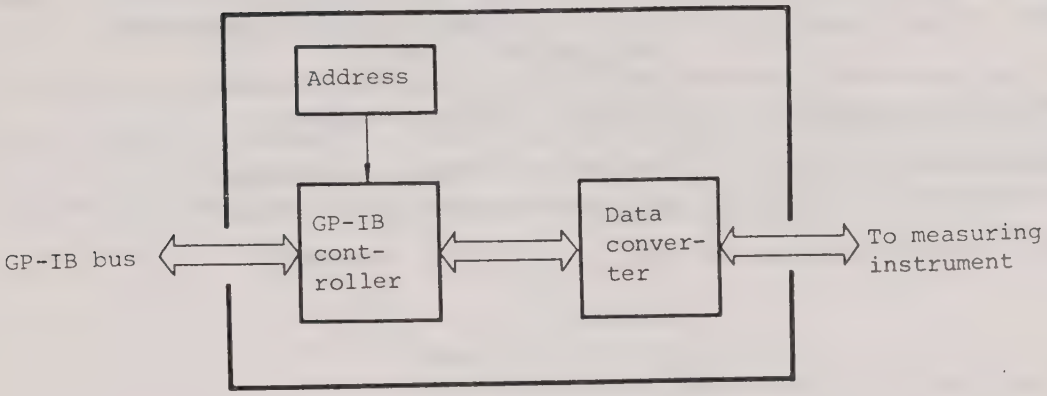


Fig. 3.1 GP-IB interface block diagram

The GP-IB controller sends and receives command/data through the GP-IB bus and controls the GP-IB bus. The data converter converts the data from the GP-IB bus into the measurement item setting code of the measuring instrument and converts the data from the measuring instrument into GP-IB format.

## SECTION 4 OPERATION

### 4.1 Operating points

This section describes only those items associated with the GP-IB interface.

Table 4.1 Operating points

| Indication | Description |
|---|---|
| REMOTE (front panel) | Lights up when the instrument is in the remote status. |
| ADDRESS (rear panel) | Address setting switch. |
| GP-IB (rear panel) | GP-IB I/O 24-pin connector |

(Refer to the ME518A, ME448A, and ME448B manual )

## 4.2 Preliminary Operation

### 4.2.1 Connection

Figure 4.1 shows an example connection.

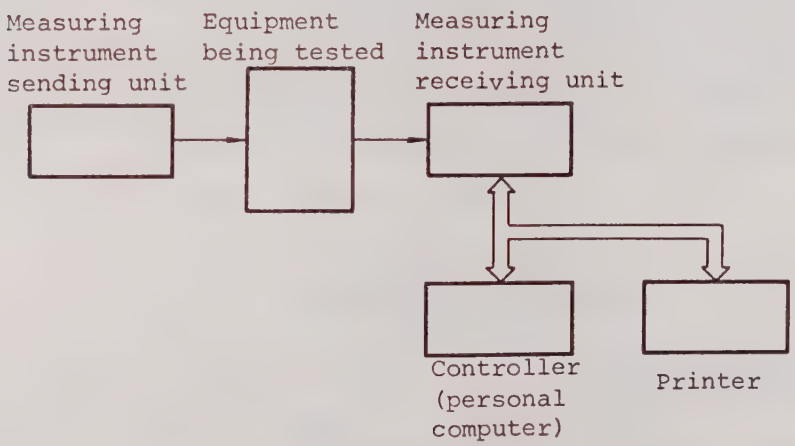


Fig. 4.1 GP-IB interface connection example

### 4.2.2 Measurement preparations

Set the address using the ADDRESS switch

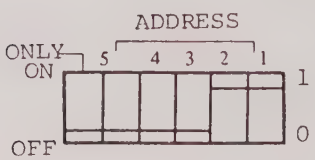


In the figure on the left, 1 has a weight of $2^0=1$, 2 has a weight of $2^1=2$, 3 has a weight of $2^2=4$, 4 has a weight of $2^3=8$, and 5 has

a weight of $2^4$=16.

The upper switch position indicates "1" and the lower position indicates "0". Therefore, the address in the above example is 3.

Addresses from 0 to 30 can be set. Address 31 cannot be used. When the ONLY and 5 switches in the figure below are set in the upper position, the talker only mode is selected regardless of setting 1 to 4.

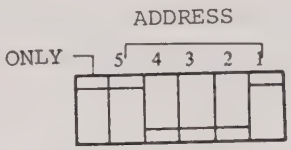


When the ONLY switch is set in the upper position and the 5b switch is set in the lower position as shown below, the listener only mode is selected regardless of settings 1b to 4 b.

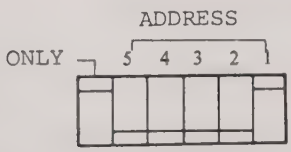


4.3 Measurements

4.3.1 Program Data Input

All codes are ASCII.

| Measurement item | Contents | ASCII code |
|---|---|---|
| COUNT TIME | $10^7$ | A |
| | $10^8$ | B |
| | $10^9$ | C |
| | MANUAL | M |
| HOLD TIME | 1 SEC | F |
| | 0 SEC | G |
| START/STOP | START | T |
| | STOP | P |
| RESET | Outputs an approximately 40 μs reset pulse. | |

One or more measurement items can be set.

Unset items retain their previously set contents. Undefined codes are ignored.

When the power is turned on, COUNT TIME is set to $10^7$, HOLD TIME is set to 0 SEC, and START/STOP is set to STOP.

4.3.2 Data Output Format

The data output format is shown below.

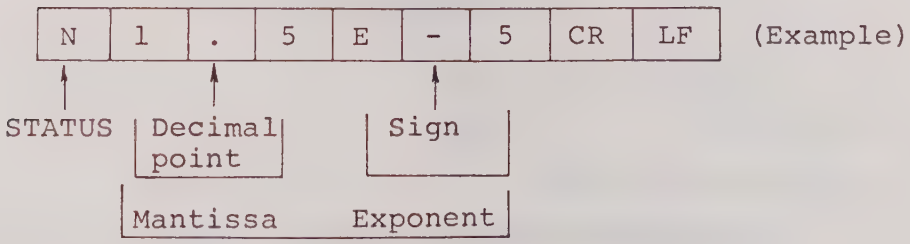


Error rate of the number of error pulse

All codes are ASCII.

| Item | ASCII code | Contents |
|---|---|---|
| STATUS | N | Normal |
| | O | Overflow |
| | L | Sync Loss |
| | I | Input Alarm |
| Sign | - | Error rate measurement |
| | + | Error pulse measurement |

The measured value is output in exponent format.

Therefore,

$$1.5E - 5 = 1.5 \times 10^{-5}$$
$$1.5E + 3 = 1.5 \times 10^{3}$$

The measure value is also output for overflow, sync loss, and input alarm states; but since this value is meaningless, it should be ignored.

EOI is output (by low level) simultaneously with the LF code as the last data item.

### 4.3.3 Measurement Example

This prograph describes use with an Anritsu Packet IIe personal computer as controller and the Anritsu DPR7713A printer as the printer.

Set measuring instrument address to 1.

(1) Measurement item setting

```
WRITE @101: "A"
```

- COUNT TIME is set to $10^7$
- Specifies the measuring instrument address.
- Indicates the GP-IB code.
- Signifies that the I/O device is specified.

(2) Data fetching

READ @101: A$

The data is input to the personal computer as a character string. A$ indicates a character string variable.

(3) Program example 1

When an interrupt request (SRQ) is used in error rate measurement

```
10  WRITE @101: "B"
```

Sets the COUNT TIME to $10^8$.

```
20  PROCESS EVENT GPIB "@01, 02"
```

Defines the interrupt signal (SRQ).

```
30  START GPIBSRQ
```

Enables the commands (70 to 130) used for interrupts.

```
40  CONNECT EVENT GPIB
```

Permits interrupts. When an interrupt occures after this, the job skips to 70.

```
50  GO TO 50
```

If some expected commands necessary, insert them at this position.

```
60  END
70  PARACT GPIBSRQ URGENCY 50
```

Declares the following commands as subroutine used for interrupts.

```
80  WAIT EVENT GPIB
```

Waits for an interrupt occurrence. 50 is processed until an interrupt occurs. After an interrupt occurs, 90 and the following commands are processed.

```
 90  STATUS @ 101 : S
```

Performs interrupt processing. The status byte is written in the position of characters S.

```
100  READ @ 101 : A$
110  WRITE @ 117 : A$
120  GO TO 80
```

Waits for the next interrupt.

```
130  END PARACT
```

Figure 4.2 is the measurement time chart.

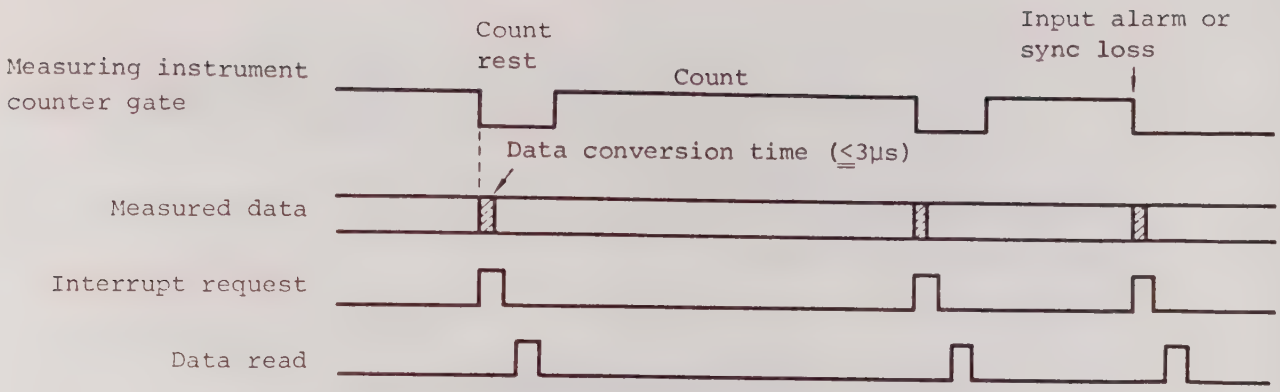


Fig. 4.2 Measurement time chart

Figure 4.3 shows the measurement time chart when an interrupt request is not used.

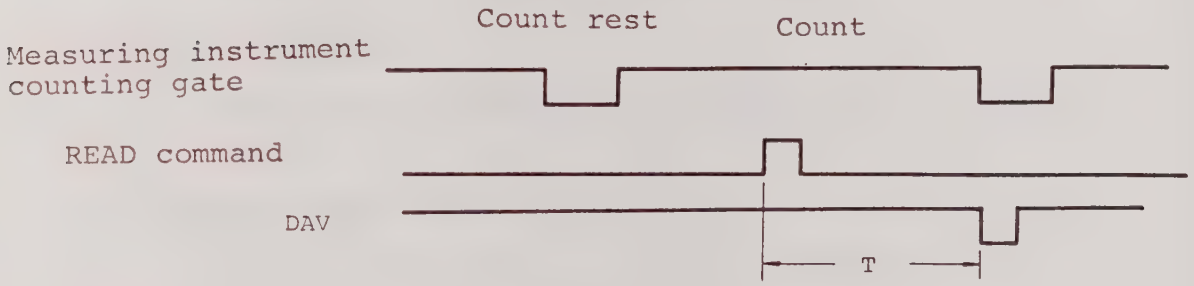


Fig. 4.3 Measurement time chart

A handshake is completed at the beginning of the next rest time even if a READ command is output during the counting time. The controller waits during this period (T in Fig. 4.3).

(4) Program example 2

Error pulse measurement. An interrupt is not used in this case.

```
1  WRITE @101: "MT"  ——  Set the COUNT TIME to MANUAL and
                         initiates measurement.

2  WAIT  DELAY 1     ——  1 second wait.

3  WRITE @101: "PT"  ——  Stops, then restarts,
                         measurement.

4  READ  @101: A$    ——  Reads the data into the personal
                         computer.

5  PRINT A$          ——  Prints the data on the printer.

6  GO TO     2       ——  Repeats measurement.

7  END
```

Figure 4.4 shows the measurement time chart. The stop command latches the data in memory.

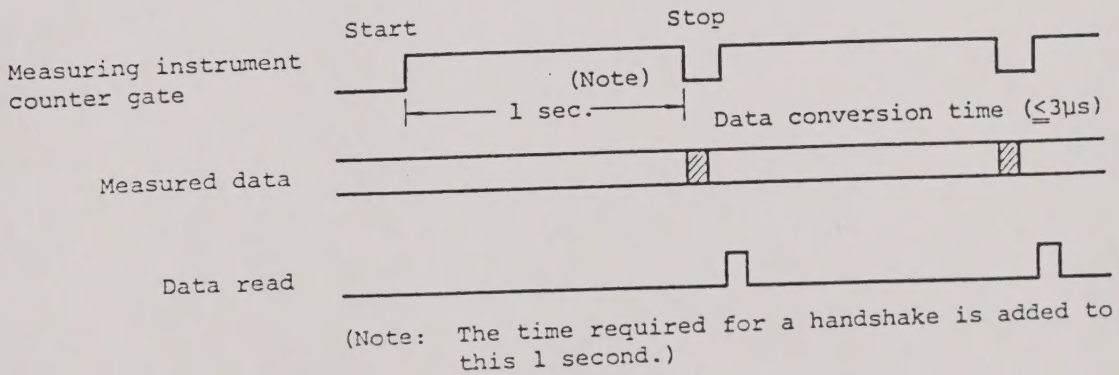


Fig. 4.4 Measurement time chart

Anritsu

ANRITSU CORPORATION
5-10-27, Minamiazabu, Minato-ku, Tokyo, 106 Japan
PHONE. 03-446-1111
TELEX 0-242-2353 ANRITU J

MP MASTER
MA32714